AVTECH ELECTROSYSTEMS LTD.
NANOSECOND WAVEFORM ELECTRONICS
SINCE 1975

info@avtechpulse.com
http://www.avtechpulse.com/

Tel: 888-670-8729 (USA & Canada) or +1-613-686-6675 (Intl)
Fax: 800-561-1970 (USA & Canada) or +1-613-686-6679 (Intl)

BOX 5120, LCD MERIVALE
OTTAWA, CANADA K2C3H5

# INSTRUCTIONS

MODEL AVRZ-5W-B

500 VOLTS INTO 50 Ω,

6.5 ns RISE TIME

PULSE GENERATOR

WITH IEEE 488.2 AND RS-232 CONTROL

SERIAL NUMBER: 13947

## WARRANTY

Avtech Electrosystems Ltd. warrants products of its manufacture to be free from defects in material and workmanship under conditions of normal use. If, within one year after delivery to the original owner, and after prepaid return by the original owner, this Avtech product is found to be defective, Avtech shall at its option repair or replace said defective item. This warranty does not apply to units which have been dissembled, modified or subjected to conditions exceeding the applicable specifications or ratings. This warranty is the extent of the obligation assumed by Avtech with respect to this product and no other warranty or guarantee is either expressed or implied.

## TECHNICAL SUPPORT

Phone: 888-670-8729 (USA & Canada) or +1-613-686-6675 (Intl)
Fax: 800-561-1970 (USA & Canada) or +1-613-686-6679 (Intl)

E-mail: info@avtechpulse.com
World Wide Web: http://www.avtechpulse.com

# TABLE OF CONTENTS

*WARRANTY*.....2
*TECHNICAL SUPPORT*.....2
*TABLE OF CONTENTS*.....3
*INTRODUCTION*.....6
*HIGH-VOLTAGE PRECAUTIONS*.....7
*SPECIFICATIONS*.....8
*REGULATORY NOTES*.....9
FCC PART 18.....9
EC DECLARATION OF CONFORMITY.....9
DIRECTIVE 2011/65/EU (RoHS).....10
DIRECTIVE 2002/96/EC (WEEE).....10
FIRMWARE LICENSING.....11
*INSTALLATION*.....12
VISUAL CHECK.....12
POWER RATINGS.....12
CONNECTION TO THE POWER SUPPLY.....12
PROTECTION FROM ELECTRIC SHOCK.....13
ENVIRONMENTAL CONDITIONS.....14
LABVIEW DRIVERS.....14
*FUSES*.....15
AC FUSE REPLACEMENT.....15
DC FUSE REPLACEMENT.....16
FUSE RATINGS.....16
*FRONT PANEL CONTROLS*.....17
*REAR PANEL CONTROLS*.....19
*GENERAL INFORMATION*.....21
BASIC PULSE CONTROL.....21
TRIGGER MODES.....22
GATING MODES.....23
*NEGATIVE PULSE GENERATION*.....24
-INV OPTION.....24
-PN OPTION.....25
*OTHER OPTIONS*.....26

-OS OFFSET OPTION....26
-LVA INTERNAL ATTENUATORS OPTION....26
-SIL SAFETY INTERLOCK OPTION....26
-RL50 RESISTOR OPTION....26
*MINIMIZING WAVEFORM DISTORTIONS....27*
USE 50 OHM TRANSMISSION LINES....27
USE LOW-INDUCTANCE LOADS....27
"BACK-PORCH" TRANSIENT....27
*PROTECTING YOUR INSTRUMENT....28*
TURN OFF INSTRUMENT WHEN NOT IN USE....28
DO NOT EXCEED 5 kHz....28
USE A 50 OHM LOAD....28
*OPERATIONAL CHECK....29*
*PROGRAMMING YOUR PULSE GENERATOR....32*
KEY PROGRAMMING COMMANDS....32
ALL PROGRAMMING COMMANDS....33
*MECHANICAL INFORMATION....35*
TOP COVER REMOVAL....35
RACK MOUNTING....35
ELECTROMAGNETIC INTERFERENCE....35
*MAINTENANCE....36*
REGULAR MAINTENANCE....36
CLEANING....36
TRIGGER DAMAGE....36
*WIRING DIAGRAMS....37*
WIRING OF AC POWER....37
PCB 158R4 - LOW VOLTAGE POWER SUPPLY....38
PCB 284B - HIGH-VOLTAGE POWER SUPPLY....39
PCB 183A-S AND 183A-P CAPACITOR BANKS....40
PCB 94G - ALARM BOARD....41
PCB 104F - KEYPAD / DISPLAY BOARD, 1/3....42
PCB 104F - KEYPAD / DISPLAY BOARD, 2/3....43
PCB 104F - KEYPAD / DISPLAY BOARD, 3/3....44
FAN WIRING....45
MAIN WIRING....46

***PERFORMANCE CHECK SHEET.....47***

Manual Reference: /fileserver1/officefiles/instructword/avrz/AVRZ-5W-B,ed39.odt.
Last modified February 29, 2024.
Copyright © 2024 Avtech Electrosystems Ltd, All Rights Reserved.

# INTRODUCTION

The AVRZ-5 models are high performance, GPIB and RS232-equipped instruments capable of generating up to +500V into 50Ω loads at repetition rates up to 5 kHz.

⚠ Note: a non-inductive 50Ω load is required for proper operation. The instrument may be damaged if a non-inductive 50Ω load is not attached. Such damage is not covered by the warranty.

The output pulse width is variable from 15 ns to 10 us. The rise time is ≤ 4.5 ns (6.5 ns for units with the -LVA option) for amplitudes below +250V, and ≤ 6.5 ns above that. The fall time is ≤ 6.5 ns (10 ns for units with the -LVA option).

The AVRZ-5 models are highly flexible instruments. Aside from the internal trigger source, they can also be triggered or gated by external TTL-level signals. A front-panel pushbutton or a computer command can also be used to trigger the instrument.

The AVRZ-5 models feature front panel keyboard and adjust knob control of the output pulse parameters along with a four line by 40-character backlit LCD display of the output amplitude, polarity, pulse width, pulse repetition frequency, source resistance and delay. The instrument includes memory to store up to four complete instrument setups. The operator may use the front panel or the computer interface to store a complete “snapshot” of all key instrument settings, and recall this setup at a later time.

Standard models generate amplitude with positive polarity.

Negative pulses can be generated using the -INV option inverting transformer accessory. (This accessory can also be ordered separately as Model AVX-R5. See http://www.avtechpulse.com/transformer/avx-r5 for details.) This accessory must be manually installed on the output in order to generate negative pulses.

Alternatively, negative pulses can also be generated internally by units with the -PN option. Units with this option contain a relay-switched inverting transformer inside the instrument. The polarity can be controlled from the front panel or remotely by computer command.

The rise and fall time specifications are ~3 ns slower for negative outputs.

This instrument is intended for use in research and development laboratories.

## HIGH-VOLTAGE PRECAUTIONS

⚠ **CAUTION:** This instrument provides output voltages as high as 500 Volts under normal operating conditions, and generates > 1000V internally, so extreme caution must be employed when using this instrument. The instrument should only be used by individuals who are thoroughly skilled in high voltage laboratory techniques. The following precautions should always be observed:

1. Keep exposed high-voltage wiring to an absolute minimum.

2. Wherever possible, use shielded connectors and cabling.

3. Connect and disconnect loads and cables only when the amplifier is turned off.

4. Keep in mind that all cables, connectors, oscilloscope probes, and loads must have an appropriate voltage rating.

Do not attempt any repairs on the instrument, beyond the fuse replacement procedures described in this manual. Contact Avtech technical support (see page 2 for contact information) if the instrument requires servicing.

# SPECIFICATIONS

| | |
|---|---|
| Model: | AVRZ-5W-B |
| Amplitude[1]: | Standard: ≤ 50 to 500 Volts. With -LVA option[7]: ≤ 0.1 to 500 Volts |
| Polarity: | Positive[4] |
| Output impedance during pulse[2]: | 50 Ω |
| Required load impedance[5]: | 50 Ω |
| Rise time (20% - 80%)[4]: | 0 to +250V: ≤ 4.5 ns (6.5 ns for units with -LVA option)<br>+250 to +500V: ≤ 6.5 ns<br>Add 3 ns for negative outputs. |
| Fall time (80% - 20%)[4]: | ≤ 6.5 ns (10 ns for units with the -LVA option)<br>Add 3 ns for negative outputs. |
| Pulse width (FWHM): | 15 ns to 10 us |
| "Back-porch" transient: | < 20% of amplitude, < 100 ns in width.<br>Repeats and decays every ~120 ns . |
| PRF: | 0 to 5 kHz |
| Duty cycle (max): | 0.1% (i.e., pulse width is limited to 200 ns at 5 kHz, 2 us at 500 Hz, etc.) |
| Jitter (Ext trig in to pulse out): | ± 200 ps ± 0.03% of sync delay |
| Trigger modes: | Internal trigger, external trigger (TTL level pulse, > 10 ns, 1 kΩ input impedance), front-panel "Single Pulse" pushbutton, or single pulse trigger via computer command. |
| Variable delay: | Sync to main out: 0 to 1.0 seconds, for all trigger modes (including external trigger). |
| Propagation delay: | ≤ 400 ns (Ext trig in to pulse out) |
| Sync output: | > +3 Volts, > 50 ns, will drive 50 Ohm loads |
| Gate input: | Synchronous, active high or low, switchable. Suppresses triggering when active. |
| Safety interlock: | Optional[9]. Adds a safety lock circuit on a rear-panel BNC connector.<br>The signal pin of this safety lock BNC connector must be shorted to chassis ground by the user's circuitry (the short must be capable of carrying 5 mA of current from an internal +5V/1kΩ DC source), otherwise the output will be switched off automatically.<br>The connector shield is connected to chassis ground. |
| GPIB and RS-232 control: | Yes. (Visit http://www.avtechpulse.com/labview for LabView drivers.) |
| Ethernet port, for remote control using VXI-11.3, ssh, telnet, & web: | Included. Recommended as a modern alternative to GPIB / RS-232.<br>See http://www.avtechpulse.com/options/vxi for details. |
| Settings resolution: | The resolution of the timing parameters (pulse width, delay, period) varies, but is always better than 0.15% of (\|set value\| + 20 ns).<br>The amplitude resolution is < 0.1% of the maximum amplitude. |
| Settings accuracy: | Typically ± 3% after 10 minute warmup. For high-accuracy applications requiring traceable calibration, verify the output parameters with a calibrated oscilloscope[8]. |
| DC offset: | Optional[6]. Apply externally-generated DC voltage (-5V to +5V) to accessory bias tee. |
| Connectors: | Out[3], Trig, Sync, Gate: BNC |
| Power requirements: | 100 - 240 Volts, 50 - 60 Hz |
| Dimensions: (H x W x D) | 100 mm x 430 mm x 475 mm (3.9" x 17" x 18.8") |
| Temperature range: | +5°C to +40°C |

1) For operation at amplitudes of less than 10% of full-scale, best results will be obtained by setting the amplitude near full-scale and using external attenuators on the output. Alternatively, add the -LVA option.
2) The output impedance falls to 2Ω (approx) for 1 us (approx) after the falling edge of the pulse, then rises to 1kΩ for the remainder of the time before the next pulse.
3) Add the suffix -NC, -HN, -MHV, or -SHV to the model number to replace the standard BNC output connector with N, HN, MHV, or SHV connectors, respectively.
4) Negative amplitudes can be generated by ordering the -INV or -PN options. The -INV option provides an optional external inverting transformer accessory, which must be manually installed. The -PN option provides internal polarity-inverting capability, with front-panel or computer control of the polarity. These options degrade the rise and fall times slightly (up to 3 ns).
5) A 50 Ohm load is required. Other loads may damage the instrument. Consult Avtech (info@avtechpulse.com) if you need to drive other load impedances.
6) To include the bias tee module, add the suffix -OS to the model number.
7) Adds internally-switched attenuators to allow very low amplitude settings. The amplitude is adjustable from < 0.1V to 500V, in steps of < 0.1V.
8) These instruments are provided with a basic calibration checksheet, showing a selection of measured output parameters. These measurements are performed with equipment that is calibrated on a regular basis by a third-party ISO/IEC 17025:2005 accredited calibration laboratory. However, Avtech itself does not claim any accreditation. For applications requiring traceable performance, use a calibrated measurement system rather than relying on the accuracy of the pulse generator settings.
9) Add the -SIL option suffix to the model number to include the safety interlock function.

# REGULATORY NOTES

## FCC PART 18

This device complies with part 18 of the FCC rules for non-consumer industrial, scientific and medical (ISM) equipment.

This instrument is enclosed in a rugged metal chassis and uses a filtered power entry module (where applicable). The main output signal is provided on a shielded connector that is intended to be used with shielded coaxial cabling and a shielded load. Under these conditions, the interference potential of this instrument is low.

If interference is observed, check that appropriate well-shielded cabling is used on the output connectors. Contact Avtech (info@avtechpulse.com) for advice if you are unsure of the most appropriate cabling. Also, check that your load is adequately shielded. It may be necessary to enclose the load in a metal enclosure.

If any of the connectors on the instrument are unused, they should be covered with shielded metal “dust caps” to reduce the interference potential.

This instrument does not normally require regular maintenance to minimize interference potential. However, if loose hardware or connectors are noted, they should be tightened. Contact Avtech (info@avtechpulse.com) if you require assistance.

## EC DECLARATION OF CONFORMITY

We Avtech Electrosystems Ltd.
P.O. Box 5120, LCD Merivale
Ottawa, Ontario
Canada K2C 3H5

declare that this pulse generator meets the intent of Directive 2004/108/EG for Electromagnetic Compatibility. Compliance pertains to the following specifications as listed in the official Journal of the European Communities:

EN 50081-1 Emission

EN 50082-1 Immunity

and that this pulse generator meets the intent of the Low Voltage Directive 2006/95/EC. Compliance pertains to the following specifications as listed in the official Journal of the European Communities:

EN 61010-1:2001 Safety requirements for electrical equipment for measurement, control, and laboratory use

DIRECTIVE 2011/65/EU (RoHS)

We Avtech Electrosystems Ltd.
P.O. Box 5120, LCD Merivale
Ottawa, Ontario
Canada K2C 3H5

declare that, to the best of our knowledge, all electrical and electronic equipment (EEE) sold by the company are in compliance with Directive 2011/65/EU of the European Parliament and of the Council of 8 June 2011 on the restriction of the use of certain hazardous substances in electrical and electronic equipment (also known as “RoHS Recast”). In addition, this declaration of conformity is issued under the sole responsibility of Avtech Electrosystems Ltd. Specifically, products manufactured do not contain the substances listed in the table below in concentrations greater than the listed maximum value.

| *Material/Substance* | *Threshold level* |
|---|---|
| Lead (Pb) | < 1000 ppm (0.1% by mass) |
| Mercury (Hg) | < 1000 ppm (0.1% by mass) |
| Hexavalent Chromium (Cr6+) | < 1000 ppm (0.1% by mass) |
| Polybrominated Biphenyls (PBB) | < 1000 ppm (0.1% by mass) |
| Polybrominated Diphenyl ethers (PBDE) | < 1000 ppm (0.1% by mass) |
| Cadmium (Cd) | < 100 ppm (0.01% by mass) |
| Bis(2-ethylhexyl) phthalate (DEHP) | < 1000 ppm (0.1% by mass) |
| Butyl benzyl phthalate (BBP) | < 1000 ppm (0.1% by mass) |
| Dibutyl phthalate (DBP) | < 1000 ppm (0.1% by mass) |
| Diisobutyl phthalate (DIBP) | < 1000 ppm (0.1% by mass) |

DIRECTIVE 2002/96/EC (WEEE)

European customers who have purchased this equipment directly from Avtech will have completed a “WEEE Responsibility Agreement” form, accepting responsibility for WEEE compliance (as mandated in Directive 2002/96/EC of the European Union and local

laws) on behalf of the customer, as provided for under Article 9 of Directive 2002/96/EC.

Customers who have purchased Avtech equipment through local representatives should consult with the representative to determine who has responsibility for WEEE compliance. Normally, such responsibilities with lie with the representative, unless other arrangements (under Article 9) have been made.

Requirements for WEEE compliance may include registration of products with local governments, reporting of recycling activities to local governments, and financing of recycling activities.

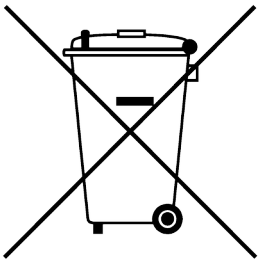

[redacted]

FIRMWARE LICENSING

Instruments with firmware versions 5.00 or higher use open-source software internally. Some of this software requires that the source code be made available to the user as a condition of its licensing. This source code is available upon request (contact info@avtechpulse.com).

Earlier firmware versions do not contain any open source software.

# INSTALLATION

## VISUAL CHECK

After unpacking the instrument, examine to ensure that it has not been damaged in shipment. Visually inspect all connectors, knobs, liquid crystal displays (LCDs), and the handles. Confirm that a power cord, a GPIB cable, and two instrumentation manuals (this manual and the “Programming Manual for -B Instruments”) are with the instrument. If the instrument has been damaged, file a claim immediately with the company that transported the instrument.

If the -INV option has been ordered, confirm that a 24”/60cm RG-58C/U cable and an AVX-R5 inverting transformer have been supplied.

## POWER RATINGS

This instrument is intended to operate from 100 - 240 V, 50 - 60 Hz.

The maximum power consumption is 74 Watts. Please see the “FUSES” section for information about the appropriate AC and DC fuses.

This instrument is an “Installation Category II” instrument, intended for operation from a normal single-phase supply.

## CONNECTION TO THE POWER SUPPLY

An IEC-320 three-pronged recessed male socket is provided on the back panel for AC power connection to the instrument. One end of the detachable power cord that is supplied with the instrument plugs into this socket. The other end of the detachable power cord plugs into the local mains supply. Use only the cable supplied with the instrument. The mains supply must be earthed, and the cord used to connect the instrument to the mains supply must provide an earth connection. (The supplied cord does this.)

⚠ Warning: Failure to use a grounded outlet may result in injury or death due to electric shock. This product uses a power cord with a ground connection. It must be connected to a properly grounded outlet. The instrument chassis is connected to the ground wire in the power cord.

The table below describes the power cord that is normally supplied with this instrument, depending on the destination region:

| Destination Region | Description | Option | Manufacturer | Part Number |
|---|---|---|---|---|
| United Kingdom, Hong Kong, Singapore, Malaysia | BS 1363, 230V, 50 Hz | -AC00 | Qualtek | 370001-E01 |
| Australia, New Zealand | AS 3112:2000, 230-240V, 50 Hz | -AC01 | Qualtek | 374003-A01 |
| Continental Europe, Korea, Indonesia, Russia | European CEE 7/7 “Schuko” 230V, 50 Hz | -AC02 | Qualtek | 364002-D01 |
| North America, Taiwan | NEMA 5-15, 120V, 60 Hz | -AC03 | Qualtek | 312007-01 |
| Switzerland | SEV 1011, 230V, 50 Hz | -AC06 | Qualtek | 378001-E01 |
| South Africa, India | SABS 164-1, 220-250V, 50 Hz | -AC17 | Volex | 2131H 10 C3 |
| Japan | JIS 8303, 100V, 50-60 Hz | -AC18 | Qualtek | 397002-01 |
| Israel | SI 32, 220V, 50 Hz | -AC19 | Qualtek | 398001-01 |
| China | GB 1002-1 / 2099-1, 220V, 50 Hz | -AC22 | Qualtek | 399012-01 |

## PROTECTION FROM ELECTRIC SHOCK

⚠ Operators of this instrument must be protected from electric shock at all times. The owner must ensure that operators are prevented access and/or are insulated from every connection point. In some cases, connections must be exposed to potential human contact. Operators must be trained to protect themselves from the risk of electric shock. This instrument is intended for use by qualified personnel who recognize shock hazards and are familiar with safety precautions required to avoid possibly injury. In particular, operators should:

1. Keep exposed high-voltage wiring to an absolute minimum.

2. Wherever possible, use shielded connectors and cabling.

3. Connect and disconnect loads and cables only when the instrument is turned off.

4. Keep in mind that all cables, connectors, oscilloscope probes, and loads must have an appropriate voltage rating.

5. Do not attempt any repairs on the instrument, beyond the fuse replacement procedures described in this manual. Contact Avtech technical support (see page 2 for contact information) if the instrument requires servicing. Service is to be performed solely by qualified service personnel.

## ENVIRONMENTAL CONDITIONS

This instrument is intended for use under the following conditions:

1. indoor use;
2. altitude up to 2 000 m;
3. temperature 5 °C to 40 °C;
4. maximum relative humidity 80 % for temperatures up to 31 °C decreasing linearly to 50 % relative humidity at 40 °C;
5. Mains supply voltage fluctuations up to ±10 % of the nominal voltage;
6. no pollution or only dry, non-conductive pollution.

## LABVIEW DRIVERS

A LabVIEW driver for this instrument is available for download on the Avtech web site, at http://www.avtechpulse.com/labview. A copy is also available in National Instruments' Instrument Driver Library at http://www.natinst.com/.

# FUSES

This instrument contains four fuses. All are accessible from the rear-panel. Two protect the AC prime power input, and two protect the internal DC power supplies. The locations of the fuses on the rear panel are shown in the figure below:

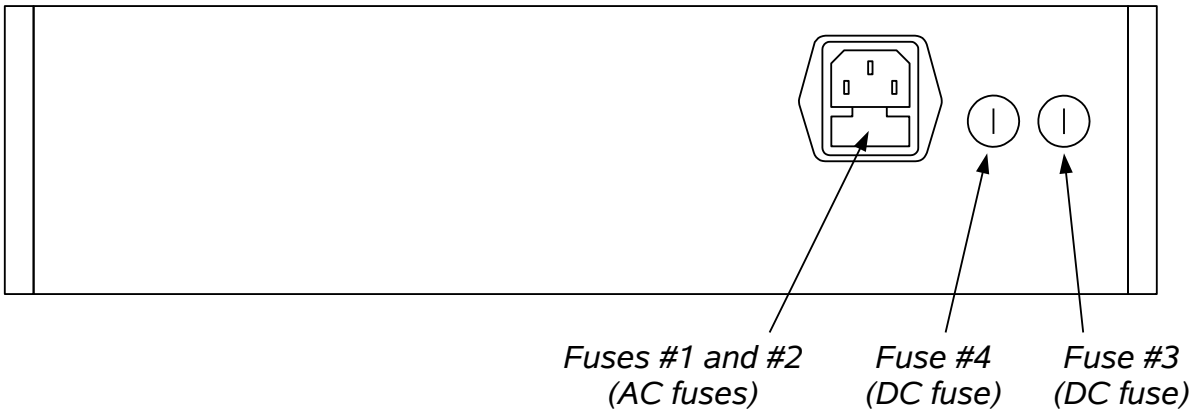


## AC FUSE REPLACEMENT

To physically access the AC fuses, the power cord must be detached from the rear panel of the instrument. The fuse drawer may then be extracted using a small flat-head screwdriver, as shown below:

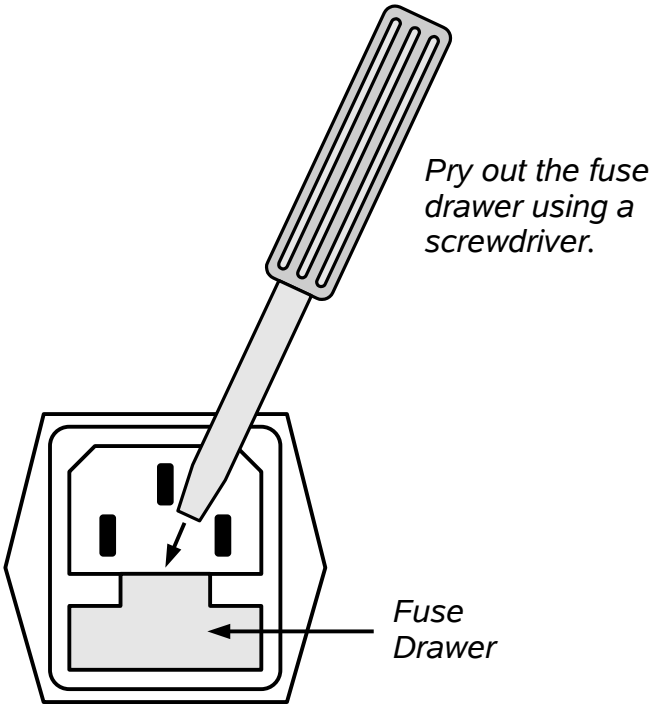

## DC FUSE REPLACEMENT

The DC fuses may be replaced by inserting the tip of a flat-head screwdriver into the fuse holder slot, and rotating the slot counter-clockwise. The fuse and its carrier will then pop out.

## FUSE RATINGS

The following table lists the required fuses:

| Fuses | Nominal Mains Voltage | Rating | Case Size | Recommended Replacement Part | |
|---|---|---|---|---|---|
| | | | | Littelfuse Part Number | Digi-Key Stock Number |
| #1, #2 (AC) | 100-240V | 0.5A, 250V, Time-Delay | 5×20 mm | 0218.500HXP | F2416-ND |
| #3 (DC) | N/A | 1.0A, 250V, Time-Delay | 5×20 mm | 0218001.HXP | F2419-ND |
| #4 (DC) | N/A | 1.6A, 250V, Time-Delay | 5×20 mm | 021801.6HXP | F2424-ND |

The recommended fuse manufacturer is Littelfuse (http://www.littelfuse.com).

Replacement fuses may be easily obtained from Digi-Key (http://www.digikey.com) and other distributors.

## FRONT PANEL CONTROLS

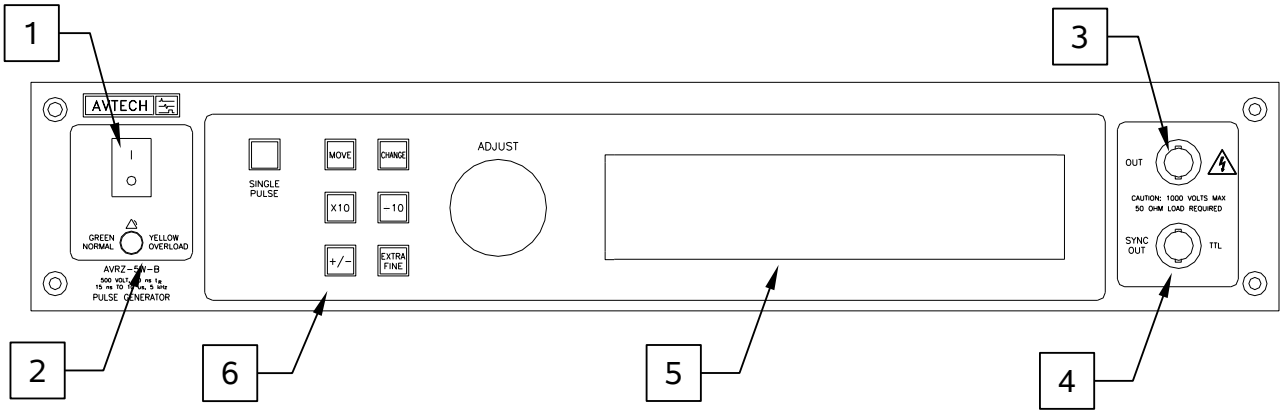


1. POWER Switch. This is the main power switch. When turning the instrument on, there is normally a delay of 10 seconds before anything is shown on the main display, as the internal operating system boots up.

   If the main menu does not appear after 30 seconds, turn off the instrument and leave it off for at least 60 seconds before applying power again.

2. OVERLOAD Indicator. When the instrument is powered, this indicator is normally green, indicating normal operation. If this indicator is yellow, an internal automatic overload protection circuit has been tripped. If the unit is overloaded (by operating at an exceedingly high duty cycle or by operating into a very low impedance), the protective circuit will disable the output of the instrument and turn the indicator light yellow. The light will stay yellow (i.e. output disabled) for about 5 seconds after which the instrument will attempt to re-enable the output (i.e. light green) for about 1 second. If the overload condition persists, the output will be disabled again (i.e. light yellow) for another 5 seconds. If the overload condition has been removed, the instrument will resume normal operation.

   This overload indicator may flash yellow briefly at start-up. This is not a cause for concern.

3. OUT CONNECTOR. This BNC connector provides the main output signal, into load impedances of 50Ω.

   ⚠ Caution: Voltages as high as 500V may be present on the center conductor of this output connector during normal operation, and the voltage may rise to > 1 kV if the output is open-circuited. Avoid touching this conductor. Connect to this connector using standard coaxial cable, to ensure that the center conductor is not exposed.

   ⚠ Note: a non-inductive 50Ω load is required for proper operation. The instrument may be damaged if a 50Ω load is not attached. Such damage is not covered by the

warranty. Do not operate into an open circuit, or circuits that do not present a true high-frequency 50 Ohm load impedance.

4. SYNC OUT. This connector supplies a SYNC output that can be used to trigger other equipment, particularly oscilloscopes. This signal leads (or lags) the main output by a duration set by the "DELAY" controls and has an approximate amplitude of +3 Volts to $R_L$ > 1 kΩ with a pulse width of approximately 100 ns.

5. KEYPAD.

| Control Name | Function |
|---|---|
| MOVE | This moves the arrow pointer on the display. |
| CHANGE | This is used to enter the submenu, or to select the operating mode, pointed to by the arrow pointer. |
| ×10 | If one of the adjustable numeric parameters is displayed, this increases the setting by a factor of ten. |
| ÷10 | If one of the adjustable numeric parameters is displayed, this decreases the setting by a factor of ten. |
| +/- | If one of the adjustable numeric parameters is displayed, and this parameter can be both positive or negative, this changes the sign of the parameter. |
| EXTRA FINE | This changes the step size of the ADJUST knob. In the extra-fine mode, the step size is twenty times finer than in the normal mode. This button switches between the two step sizes. |
| ADJUST | This large knob adjusts the value of any displayed numeric adjustable values, such as frequency, pulse width, etc. The adjust step size is set by the "EXTRA FINE" button.<br><br>When the main menu is displayed, this knob can be used to move the arrow pointer. |

6. LIQUID CRYSTAL DISPLAY (LCD). This LCD is used in conjunction with the keypad to change the instrument settings. Normally, the main menu is displayed, which lists the key adjustable parameters and their current values. The “Programming Manual for -B Instruments” describes the menus and submenus in detail.

## REAR PANEL CONTROLS

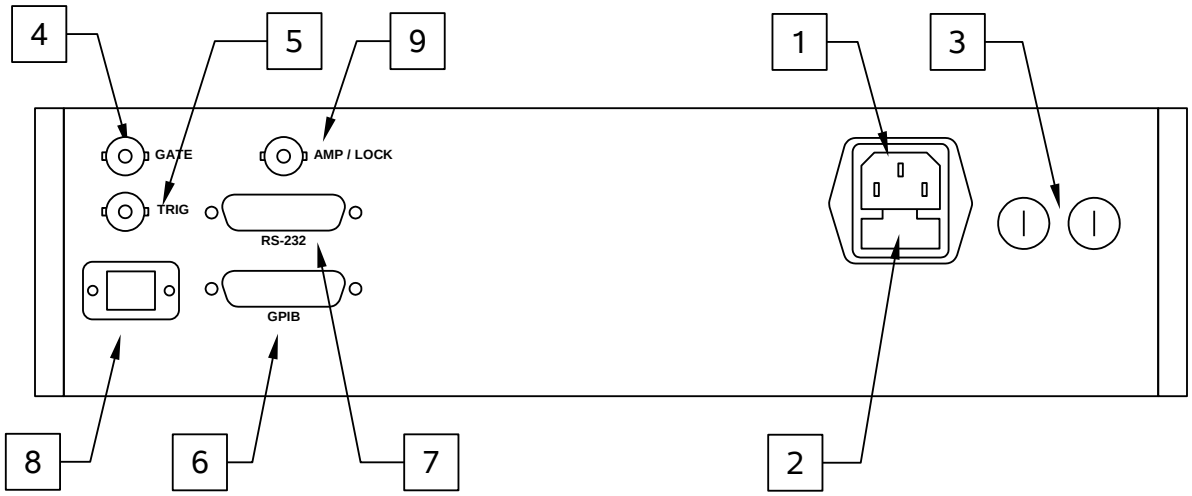


*Note: some connectors may be in different positions than shown above, depending on the exact combination of options ordered.*

1. AC POWER INPUT. An IEC-320 C14 three-pronged recessed male socket is provided on the back panel for AC power connection to the instrument. One end of the detachable power cord that is supplied with the instrument plugs into this socket.

2. AC FUSE DRAWER. The two fuses that protect the AC input are located in this drawer. Please see the “FUSES” section of this manual for more information.

3. DC FUSES. These two fuses protect the internal DC power supplies. Please see the “FUSES” sections of this manual for more information.

4. GATE. This TTL-level (0 and +5V) logic input can be used to gate the triggering of the instrument. This input can be either active high or active low, depending on the front panel settings or programming commands. (The instrument triggers normally when this input is unconnected). When set to active high mode, this input is pulled-down to ground by a 1 kΩ resistor. When set to active low mode, this input is pulled-up to +5V by a 1 kΩ resistor.

5. TRIG. This TTL-level (0 and +5V) logic input can be used to trigger the instrument, if the instrument is set to triggering externally. The instrument triggers on the rising edge of this input. The input impedance of this input is 1 kΩ. (Depending on the length of cable attached to this input, and the source driving it, it may be desirable to add a coaxial 50 Ohm terminator to this input to provide a proper transmission line termination. The Pasternack (www.pasternack.com) PE6008-50 BNC feed-thru 50 Ohm terminator is suggested for this purpose.)

6. GPIB Connector. A standard GPIB cable can be attached to this connector to allow the instrument to be computer-controlled. See the “Programming Manual for -B Instruments” for more details on GPIB control.

7. RS-232 Connector. A standard serial cable with a 25-pin male connector can be attached to this connector to allow the instrument to be computer-controlled. A user name (“admin”) and a password (“default”, as shipped from the factory) are required when logging into a serial terminal session. The internal controller attempts to auto-sense the parity setting. It may be necessary to send a few return characters before attempting a login in order to provide enough data to allow this auto-sensing to work. (A standard Linux “agetty” process is used to implement serial control internally.) See the “Programming Manual for -B Instruments” for more details on RS-232 control.

8. Network Connector. This Ethernet connector allows the instrument to be remotely controlled using the VXI-11.3, ssh (secure shell), telnet, and http (web) protocols. See the “Programming Manual for -B Instruments” for more details.

9. AMP Connector. (Optional feature. Present on -EA units only.) The output amplitude can be set to track the voltage on this input. Zero Volts in corresponds to zero amplitude output, and +10V in corresponds to maximum amplitude out. This mode is activated by selecting "Ext Control" on the front-panel amplitude menu, or with the "source:voltage external" command.

   Or

   LOCK Connector. (Optional feature. Present on -SIL units only.) The signal pin of this safety lock BNC connector must be shorted to chassis ground by the user’s circuitry (the short must be capable of carrying 5 mA of current from an internal +5V/1kΩ DC source), otherwise the output will be switched off automatically. The connector shield is connected to chassis ground.

# GENERAL INFORMATION

## BASIC PULSE CONTROL

This instrument can be triggered by its own internal clock or by an external TTL trigger signal. In either case, two output channels respond to the trigger: OUT and SYNC. The OUT channel is the signal that is applied to the load. Its amplitude and pulse width are variable. The SYNC pulse is a fixed-width TTL-level reference pulse used to trigger oscilloscopes or other measurement systems. When the delay is set to a positive value the SYNC pulse precedes the OUT pulse. When the delay is set to a negative value the SYNC pulse follows the OUT pulse.

These pulses are illustrated below, assuming internal triggering, positive delay, and a positive output amplitude:

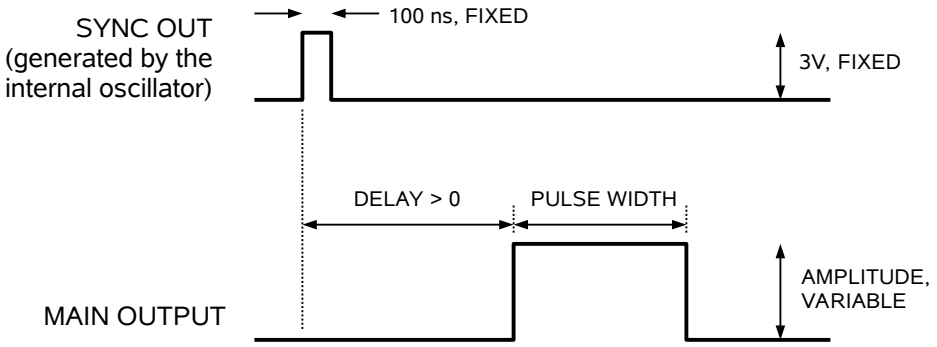


*Figure A*

If the delay is negative, the order of the SYNC and OUT pulses is reversed:

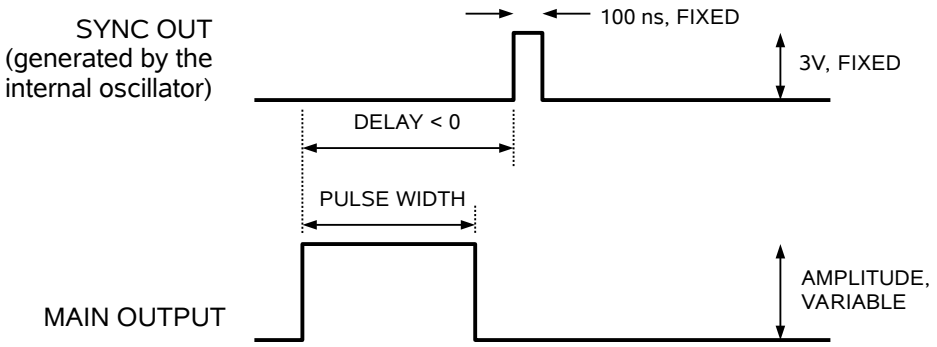


*Figure B*

The next figure illustrates the relationship between the signals when an external TTL-level trigger is used:

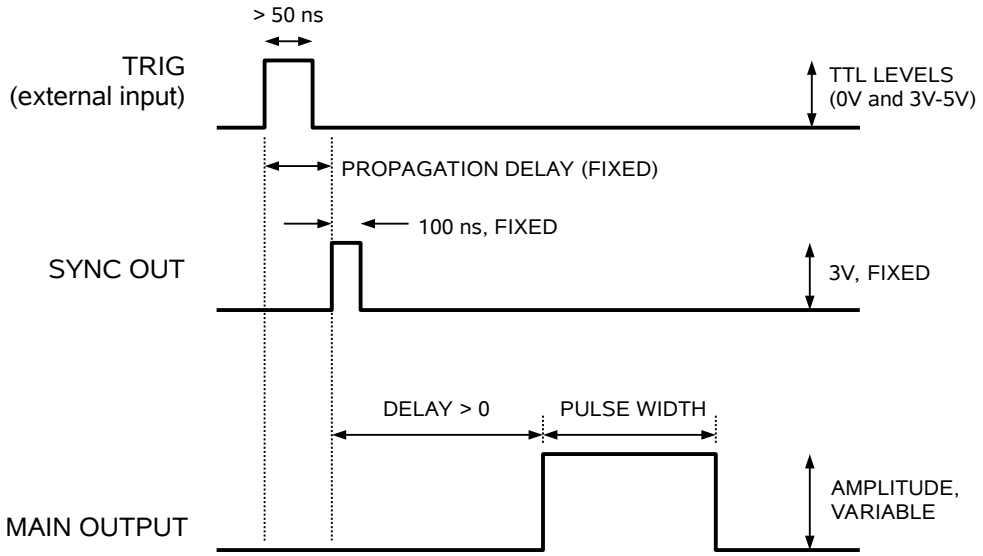


*Figure C*

As before, if the delay is negative, the order of the SYNC and OUT pulses is reversed.

The delay, pulse width, and frequency (when in the internal mode), of the OUT pulse can be varied with front panel controls or via the GPIB or RS-232 computer interfaces.

## TRIGGER MODES

This instrument has four trigger modes:

- Internal Trigger: the instrument controls the trigger frequency, and generates the clock internally.
- External Trigger: the instrument is triggered by an external TTL-level clock on the back-panel TRIG connector.
- Manual Trigger: the instrument is triggered by the front-panel “SINGLE PULSE” pushbutton.
- Hold Trigger: the instrument is set to not trigger at all.

These modes can be selected using the front panel trigger menu, or by using the appropriate programming commands. (See the “Programming Manual for -B Instruments” for more details.)

## GATING MODES

Triggering can be suppressed by a TTL-level signal on the rear-panel GATE connector. The instrument can be set to stop triggering when this input high or low, using the front-panel gate menu or the appropriate programming commands.

The timing nature (synchronous versus asynchronous) is adjustable on some instruments. Certain instruments may offer synchronous gating only.

When set to asynchronous mode, the GATE will disable the output immediately. Output pulses may be truncated. When set to synchronous mode, the output will complete the full pulse width if the output is high, and then stop triggering. No pulses are truncated in this mode.

# NEGATIVE PULSE GENERATION

## -INV OPTION

The AVRZ-5W-B mainframe normally generate positive amplitudes in the range of 0 to +500V.

Negative pulses can be generated using the -INV option inverting transformer accessory. (This accessory can also be ordered separately as Model AVX-R5. See http://www.avtechpulse.com/transformer/avx-r5 for details.)

The inverting transformer accessory is connected to the output of the AVRZ-5W-B mainframe using standard coaxial cable. (This cable should be as short as possible to minimize possible reflections.) The basis test arrangement is shown below:

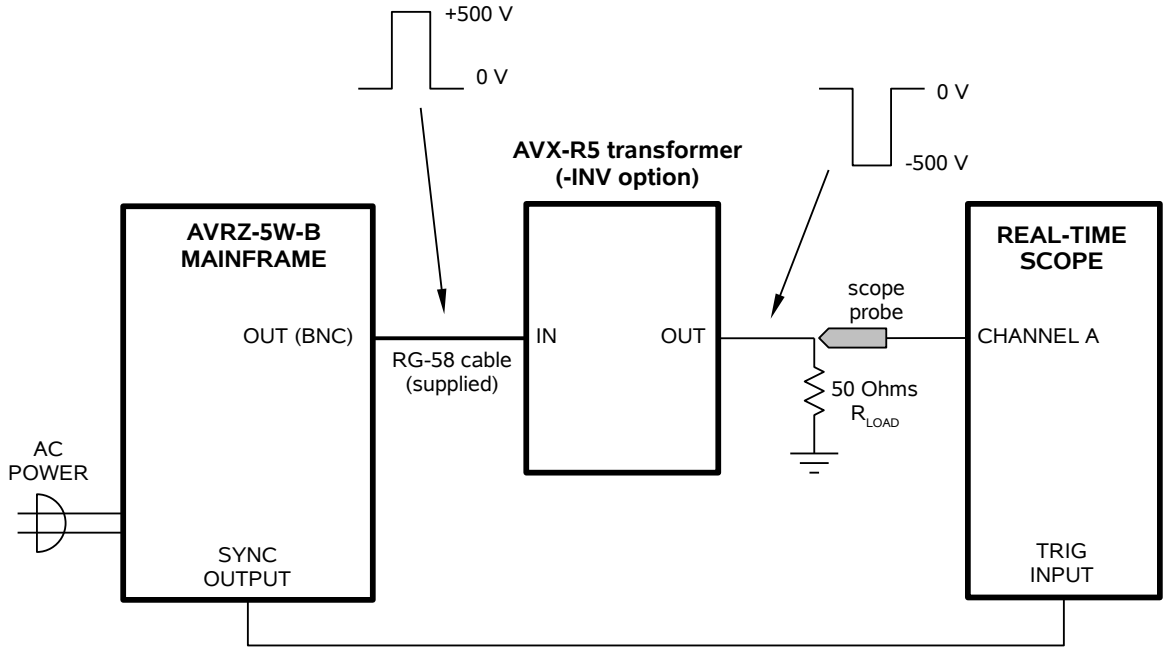


The transformer is capable of operating up to the maximum rated pulse width of the AVRZ-5W-B (10 us). The transformer may introduce slight rounding and ringing to the output waveform, and it may degrade rise and fall times slightly (by 1-3 ns, typically). A typical waveform photo is shown below:

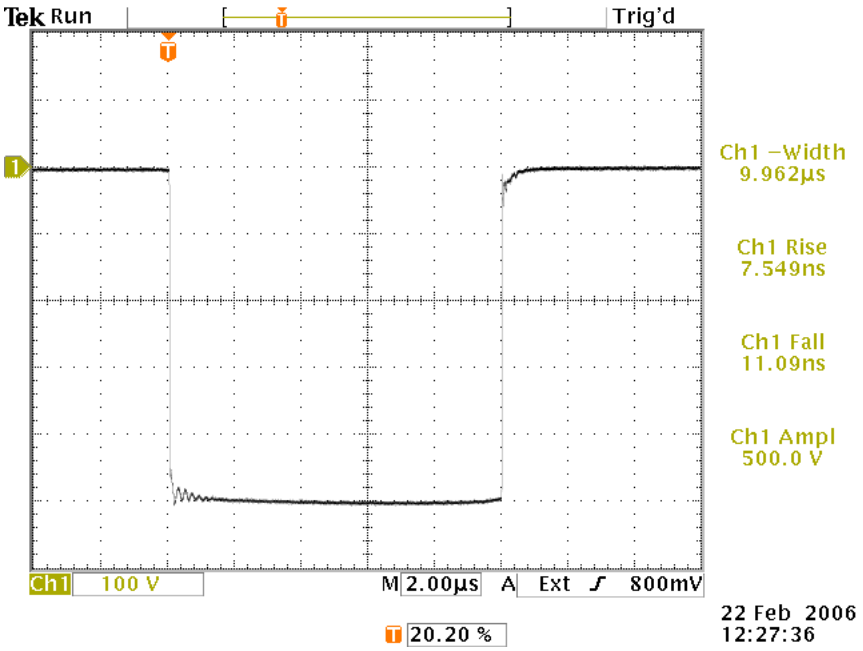


100 V/div, 2 us/div.
(Rise and fall times measured at 20%-80%)

## -PN OPTION

Instruments with the -PN option contain a relay-switched inverting transformer inside the instrument. The performance is similar to that described above.

The polarity is controlled by setting the amplitude to a negative value from the front panel, or by computer command (for example: volt -400).

# OTHER OPTIONS

## -OS OFFSET OPTION

This option provides a special-purpose bias-tee accessory module (model AVX-TG), which can be used to apply a 0 to +/- 5V DC offset to the output of the instrument. This bias-tee can be placed before or after any installed attenuators, if required. The externally-generated DC bias is applied to a solder terminal. The input and output pulses are provided on BNC connectors.

A 24"/60cm RG-58C/U coaxial cable is provided, to connect the bias-tee to the mainframe output.

The input and output terminals are interchangeable (the internal circuitry is symmetrical).

At maximum pulse width, this bias tee will introduce ~10% droop on the pulse top, typically.

## -LVA INTERNAL ATTENUATORS OPTION

This option adds internally-switched attenuators to allow very low amplitude settings. Specifically, the pulser voltage amplitude setting ($V_{OUT}$) will be adjustable from <+0.1V to +500V, in steps of < 0.1V.

## -SIL SAFETY INTERLOCK OPTION

This option adds a safety lock circuit on a rear-panel BNC connector. The signal pin of this safety lock BNC connector must be shorted to chassis ground by the user's circuitry (the short must be capable of carrying 5 mA of current from an internal +5V/1kΩ DC source), otherwise the output will be switched off automatically. The connector shield is connected to chassis ground.

## -RL50 RESISTOR OPTION

Provides a connectorized 50 Ohm (±10%) 5 Watt resistor suitable for use with the pulser. This resistor can withstand the peak currents (10A maximum) generated by pulser.

The two resistor terminals are accessed via two BNC female connectors, and are interchangeable. The shields of the BNC connectors are grounded. This resistor may be suitable for connection in series with a diode load.

# MINIMIZING WAVEFORM DISTORTIONS

## USE 50 OHM TRANSMISSION LINES

Connect the load to the pulse generator with 50Ω coaxial transmission lines. See the "What Coaxial Cable Should I Use?" application note at http://www.avtechpulse.com/appnote/techbrief6/ for a listing of different possible types of coaxial cable.

⚠ Note: a non-inductive 50Ω load is required for proper operation. The instrument may be damaged if a 50Ω load is not attached. Such damage is not covered by the warranty. Do not operate into an open circuit, or circuits that do not present a true high-frequency 50 Ohm load impedance.

## USE LOW-INDUCTANCE LOADS

Lenz's Law predicts that for an inductive voltage spike will be generated when the current through an inductance changes. Specifically, $V_{SPIKE} = L \times dI_{LOAD}/dt$, where L is the inductance, $I_{LOAD}$ is the load current change, and t is time. For this reason, it is important to keep any parasitic in the load low. This means keeping wiring short, and using low inductance components. In particular, wire-wound resistors should be avoided.

The Ohmite OY series (www.ohmite.com) of ceramic composition resistors are highly recommended for low-inductance pulsed applications. Note that you may need to use several resistors connected in series and/or parallel to achieve appropriate power and voltage capability.

## "BACK-PORCH" TRANSIENT

A "back-porch" transient is present on the falling edge of the AVRZ-5W-B output. This is normal, and unavoidable. A typical waveform is shown below:

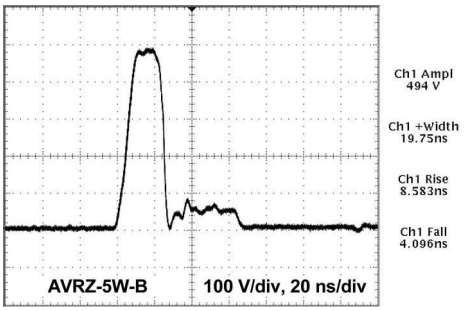


This transient should be less than 20% of the peak amplitude, and less than 100 ns in duration.

# PROTECTING YOUR INSTRUMENT

## TURN OFF INSTRUMENT WHEN NOT IN USE

The lifetime of the switching elements in the pulse generator module is proportional to the running time of the instrument. For this reason the prime power to the instrument should be turned off when the instrument is not in use. In the case of failure, the switching elements are easily replaced following the procedure described in a following section.

## DO NOT EXCEED 5 kHz

The output stage may be damaged if triggered by an external signal at a pulse repetition frequency greater than 5 kHz.

## USE A 50 OHM LOAD

A non-inductive 50Ω load is required for proper operation. The instrument may be damaged if a 50Ω load is not attached. Such damage is not covered by the warranty. Do not operate into an open circuit, or circuits that do not present a true high-frequency 50 Ohm load impedance.

# OPERATIONAL CHECK

This section describes a sequence to confirm the basic operation of the instrument. It should be performed after receiving the instrument. It is a useful learning exercise as well.

Before proceeding with this procedure, finish reading this instruction manual thoroughly. Then read the “Local Control” section of the “Programming Manual for -B Instruments” thoroughly. The “Local Control” section describes the front panel controls used in this operational check - in particular, the MOVE, CHANGE, and ADJUST controls.

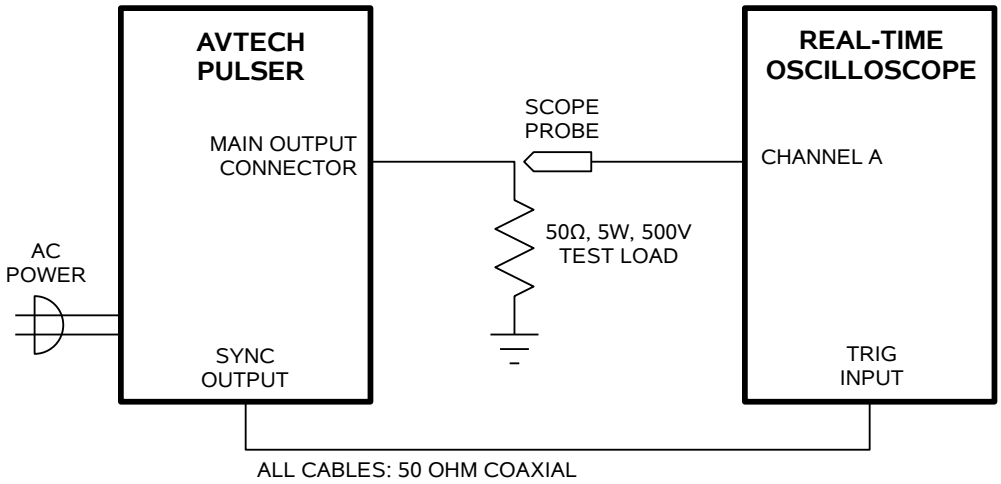


1. Connect a cable from the SYNC OUT connector to the TRIG input of an oscilloscope. Connect a 5W (or higher) 50Ω load with a voltage rating > 500V to the OUT connector and place the scope probe across this load. Set the oscilloscope to trigger externally with the vertical setting at 100 Volts/div and the horizontal setting at 1 us/div.

   ⚠ Confirm that the scope probe and the test load are rated for 500V pulses.

   ⚠ Note that many high-voltage probes have limited bandwidth ratings, and may distort the signal slightly. In particular, the rise and fall time measurements may be higher than expected, and some ringing may be seen on the waveform.

2. For units with the -SIL option, ensure that the signal pin of the rear-panel LOCK BNC connector is shorted to chassis ground. (The connector shield is connected to chassis ground.)

3. Turn on the AVRZ-5W-B. The main menu will appear on the LCD.

4. To set the AVRZ-5W-B to trigger from the internal clock at a PRF of 100 Hz:

    a) The arrow pointer should be pointing at the frequency menu item. If it is not, press the MOVE button until it is.

    b) Press the CHANGE button. The frequency submenu will appear. Rotate the ADJUST knob until the frequency is set at 100 Hz.

    c) The arrow pointer should be pointing at the “Internal” choice. If it is not, press MOVE until it is.

    d) Press CHANGE to return to the main menu.

5. To set the delay to 1 us:

    a) Press the MOVE button until the arrow pointer is pointing at the delay menu item.

    b) Press the CHANGE button. The delay submenu will appear. Rotate the ADJUST knob until the delay is set at 1 us.

    c) The arrow pointer should be pointing at the “Normal” choice. If it is not, press MOVE until it is.

    d) Press CHANGE to return to the main menu.

6. To set the pulse width to 1 us:

    a) Press the MOVE button until the arrow pointer is pointing at the pulse width menu item.

    b) Press the CHANGE button. The pulse width submenu will appear. Rotate the ADJUST knob until the pulse width is set at 1 us.

    c) The arrow pointer should be pointing at the “Normal” choice. If it is not, press MOVE until it is.

    d) Press CHANGE to return to the main menu.

7. At this point, nothing should appear on the oscilloscope.

8. To enable the output:

    a) Press the MOVE button until the arrow pointer is pointing at the output menu item.

    b) Press the CHANGE button. The output submenu will appear.

c) Press MOVE until the arrow pointer is pointing at the “ON” choice.

d) Press CHANGE to return to the main menu.

9. To change the output amplitude:

   a) Press the MOVE button until the arrow pointer is pointing at the amplitude menu item.

   b) Press the CHANGE button. The amplitude submenu will appear. Rotate the ADJUST knob until the amplitude is set at 200V.

   c) Observe the oscilloscope. You should see 1 us wide, 200V pulses.

   d) Rotate the ADJUST knob. The amplitude as seen on the oscilloscope should vary. Set it at 500V.

   e) Press CHANGE to return to the main menu.

10. Try varying the pulse width, by repeating step (5). As you rotate the ADJUST knob, the pulse width on the oscilloscope will change. It should agree with the displayed value. Stay below 0.1% duty cycle.

This completes the operational check.

# PROGRAMMING YOUR PULSE GENERATOR

## KEY PROGRAMMING COMMANDS

The “Programming Manual for -B Instruments” describes in detail how to connect the pulse generator to your computer, and the programming commands themselves. A large number of commands are available; however, normally you will only need a few of these. Here is a basic sample sequence of commands that might be sent to the instrument after power-up:

| | |
|---|---|
| *rst | (resets the instrument) |
| trigger:source internal | (selects internal triggering) |
| frequency 1000 Hz | (sets the frequency to 1000 Hz) |
| pulse:width 1 us | (sets the pulse width to 1 us) |
| pulse:delay 1 us | (sets the delay to 1 us) |
| volt 250 | (sets the amplitude to +250 V) |
| output on | (turns on the output) |

For triggering a single event, this sequence would be more appropriate:

| | |
|---|---|
| *rst | (resets the instrument) |
| trigger:source hold | (turns off all triggering) |
| pulse:width 500 ns | (sets the pulse width to 500 ns) |
| output on | (turns on the output) |
| volt:ampl +250 | (sets the amplitude to +250 V) |
| trigger:source immediate | (generates a single non-repetitive trigger event) |
| trigger:source hold | (turns off all triggering) |
| output off | (turns off the output) |

To set the instrument to trigger from an external TTL signal applied to the rear-panel TRIG connector, use:

| | |
|---|---|
| *rst | (resets the instrument) |
| trigger:source external | (selects internal triggering) |
| pulse:width 500 ns | (sets the pulse width to 500 ns) |
| pulse:delay 1 us | (sets the delay to 1 us) |
| volt:ampl 190V | (sets the amplitude to +190 V) |
| output on | (turns on the output) |

These commands will satisfy 90% of your programming needs.

## ALL PROGRAMMING COMMANDS

For more advanced programmers, a complete list of the available commands is given below. These commands are described in detail in the “Programming Manual for -B Instruments”. (Note: this manual also includes some commands that are not implemented in this instrument. They can be ignored.)

| Keyword | Parameter | Notes |
|---|---|---|
| OUTPut: | | |
| :[STATe] | <boolean value> | |
| :PROTection | | |
| :TRIPped? | | [query only] |
| [SOURce]: | | |
| :FREQuency | | |
| [:CW \| FIXed] | <numeric value> | |
| [SOURce]: | | |
| :PULSe | | |
| :PERiod | <numeric value> | |
| :WIDTh | <numeric value> | |
| :DCYCle | <numeric value> | |
| :HOLD | WIDTh \| DCYCle | |
| :DELay | <numeric value> | |
| :GATE | | |
| :TYPE | ASYNC \| SYNC | |
| :LEVel | HIgh \| LOw | |
| [SOURce]: | | |
| :VOLTage | | |
| [:LEVel] | | |
| [:IMMediate] | | |
| [:AMPLitude] | <numeric value> \| EXTernal | |
| :PROTection | | |
| :TRIPped? | | [query only] |
| STATUS: | | |
| :OPERation | | |
| :[EVENt]? | | [query only, always returns "0"] |
| :CONDition? | | [query only, always returns "0"] |
| :ENABle | <numeric value> | [implemented but not useful] |
| :QUEStionable | | |
| :[EVENt]? | | [query only, always returns "0"] |
| :CONDition? | | [query only, always returns "0"] |
| :ENABle | <numeric value> | [implemented but not useful] |
| SYSTem: | | |
| :COMMunicate | | |
| :GPIB | | |
| :ADDRess | <numeric value> | |
| :SERial | | |
| :CONTrol | | |
| :RTS | ON \| IBFull \| RFR | |
| :[RECeive] | | |
| :BAUD | 1200 \| 2400 \| 4800 \| 9600 \| 19200 \| 38400 \| 57600 \| 115200 | |
| :ERRor | | |
| :[NEXT]? | | [query only] |
| :COUNT? | | [query only] |
| :VERSion? | | [query only] |
| TRIGger: | | |

| | | |
|---|---|---|
| :SOURce | INTernal \| EXTernal \| MANual \| HOLD \| IMMediate | |
| *CLS | | [no query form] |
| *ESE | <numeric value> | |
| *ESR? | | [query only] |
| *IDN? | | [query only] |
| *OPC | | |
| *SAV | 0 \| 1 \| 2 \| 3 | [no query form] |
| *RCL | 0 \| 1 \| 2 \| 3 | [no query form] |
| *RST | | [no query form] |
| *SRE | <numeric value> | |
| *STB? | | [query only] |
| *TST? | | [query only] |
| *WAI | | [no query form] |

# MECHANICAL INFORMATION

## TOP COVER REMOVAL

If necessary, the interior of the instrument may be accessed by removing the four Phillips screws on the top panel. With the four screws removed, the top cover may be slid back (and off).

⚠ Always disconnect the power cord and allow the instrument to sit unpowered for 10 minutes before opening the instrument. This will allow any internal stored charge to discharge.

There are no user-adjustable internal circuits. For repairs other than fuse replacement, please contact Avtech (info@avtechpulse.com) to arrange for the instrument to be returned to the factory for repair. Service is to be performed solely by qualified service personnel.

⚠ Caution: High voltages are present inside the instrument during normal operation. Do not operate the instrument with the cover removed.

## RACK MOUNTING

A rack mounting kit is available. The -R5 rack mount kit may be installed after first removing the one Phillips screw on the side panel adjacent to the front handle.

## ELECTROMAGNETIC INTERFERENCE

To prevent electromagnetic interference with other equipment, all used outputs should be connected to shielded loads using shielded coaxial cables. Unused outputs should be terminated with shielded coaxial terminators or with shielded coaxial dust caps, to prevent unintentional electromagnetic radiation. All cords and cables should be less than 3m in length.

# MAINTENANCE

## REGULAR MAINTENANCE

This instrument does not require any regular maintenance.

On occasion, one or more of the four rear-panel fuses may require replacement. All fuses can be accessed from the rear panel. See the “FUSES” section for details.

## CLEANING

If desired, the interior of the instrument may be cleaned using compressed air to dislodge any accumulated dust. (See the “TOP COVER REMOVAL” section for instructions on accessing the interior.) No other cleaning is recommended.

## TRIGGER DAMAGE

The rear-panel TRIG input, used in the external trigger mode, is protected by a diode clamping circuit. However, the protection circuit is not foolproof, and it is possible for a grossly excessive signal to damage the trigger circuitry on the main timing control board (the 4×10 inch board on the right side of the instrument).

The IC that is most likely to fail under these conditions is installed in a socket. It is a standard TTL IC in a 16-pin plastic DIP package, model 74F151 or equivalent.

If you suspect that this IC has been damaged, turn off the power and replace this IC. It may be replaced by a 74F151, 74LS151, 74ALS151, or 74HCT151.

# WIRING DIAGRAMS

## WIRING OF AC POWER

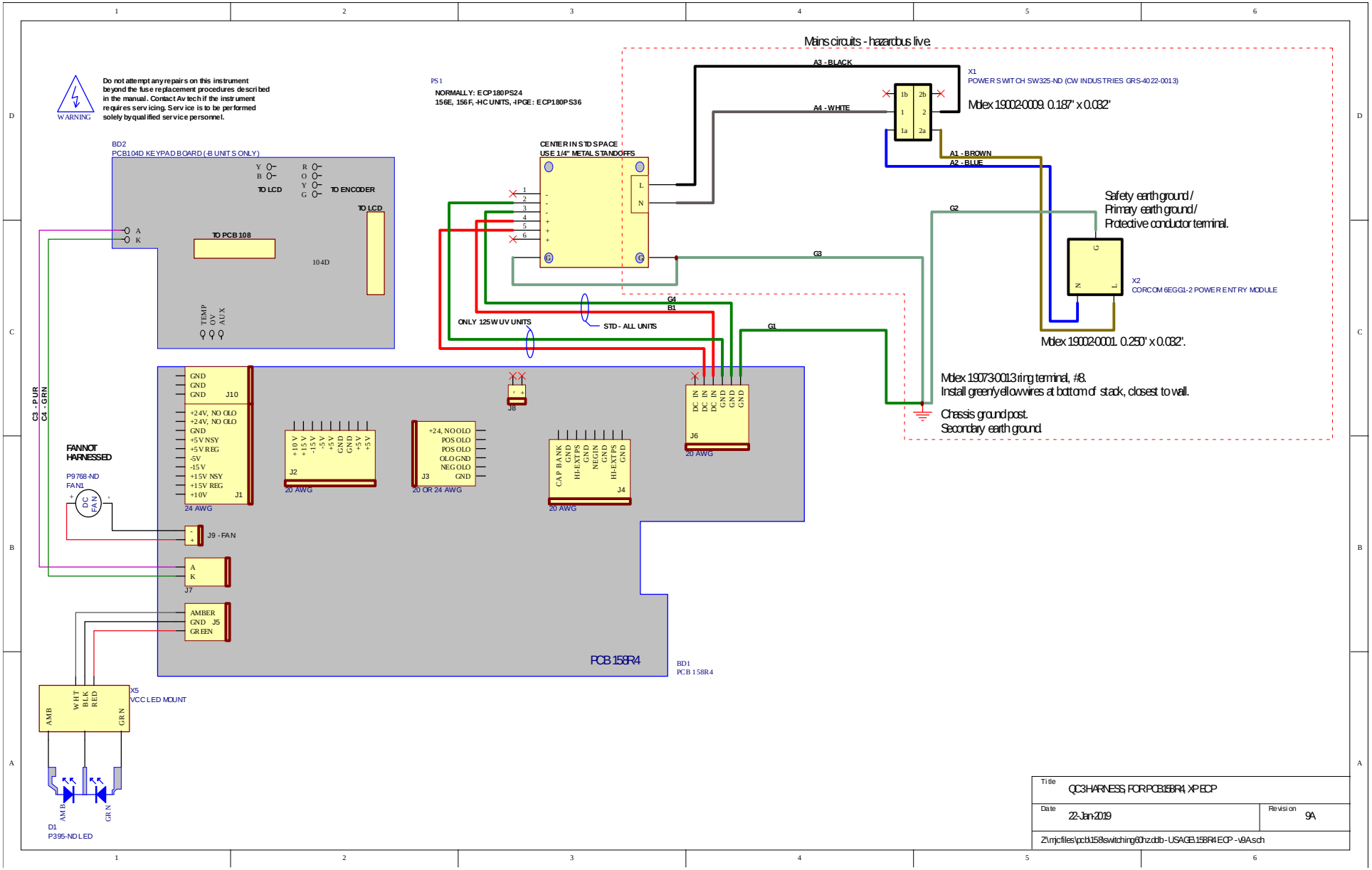

# PCB 158R4 - LOW VOLTAGE POWER SUPPLY

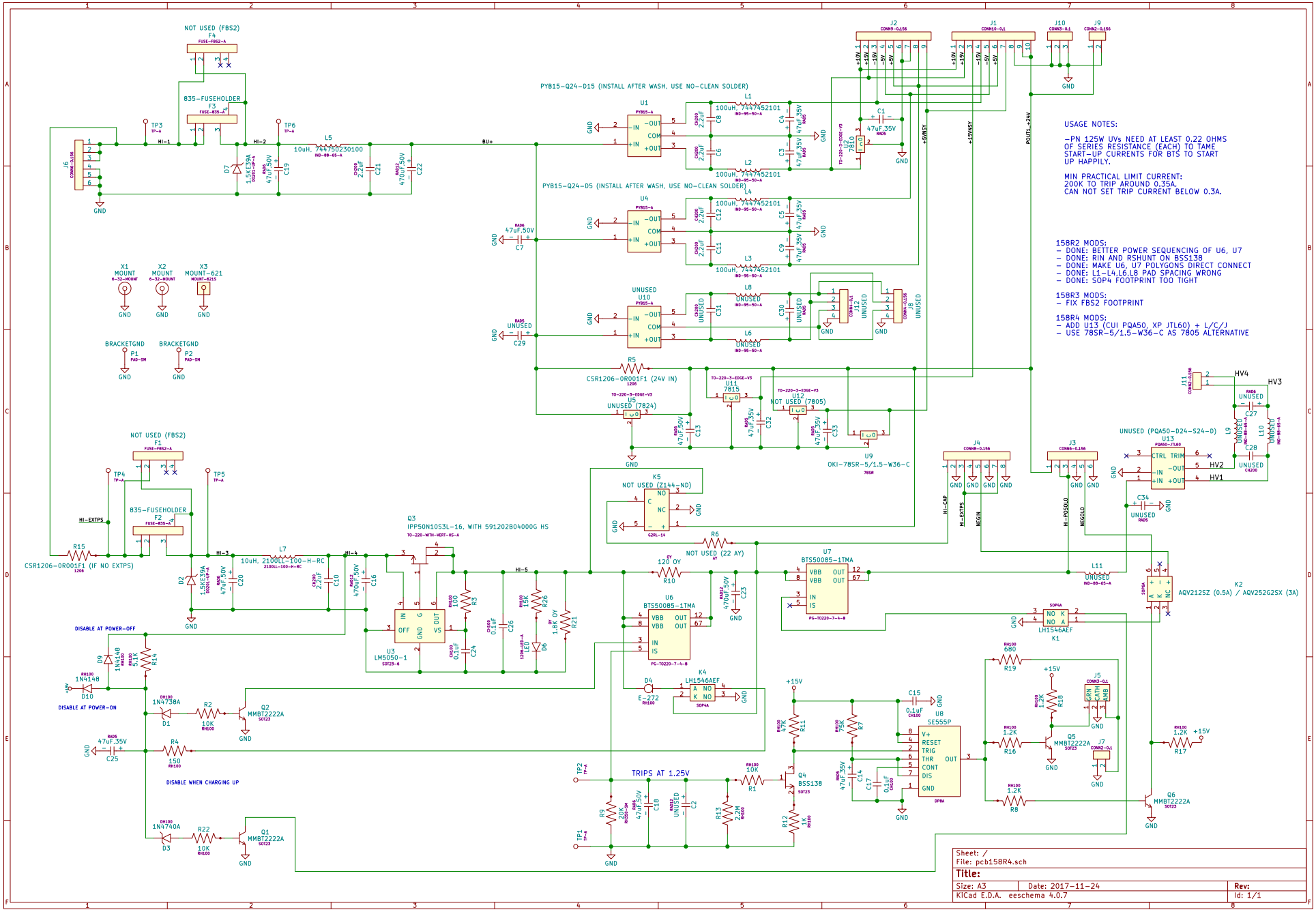

# PCB 284B - HIGH-VOLTAGE POWER SUPPLY

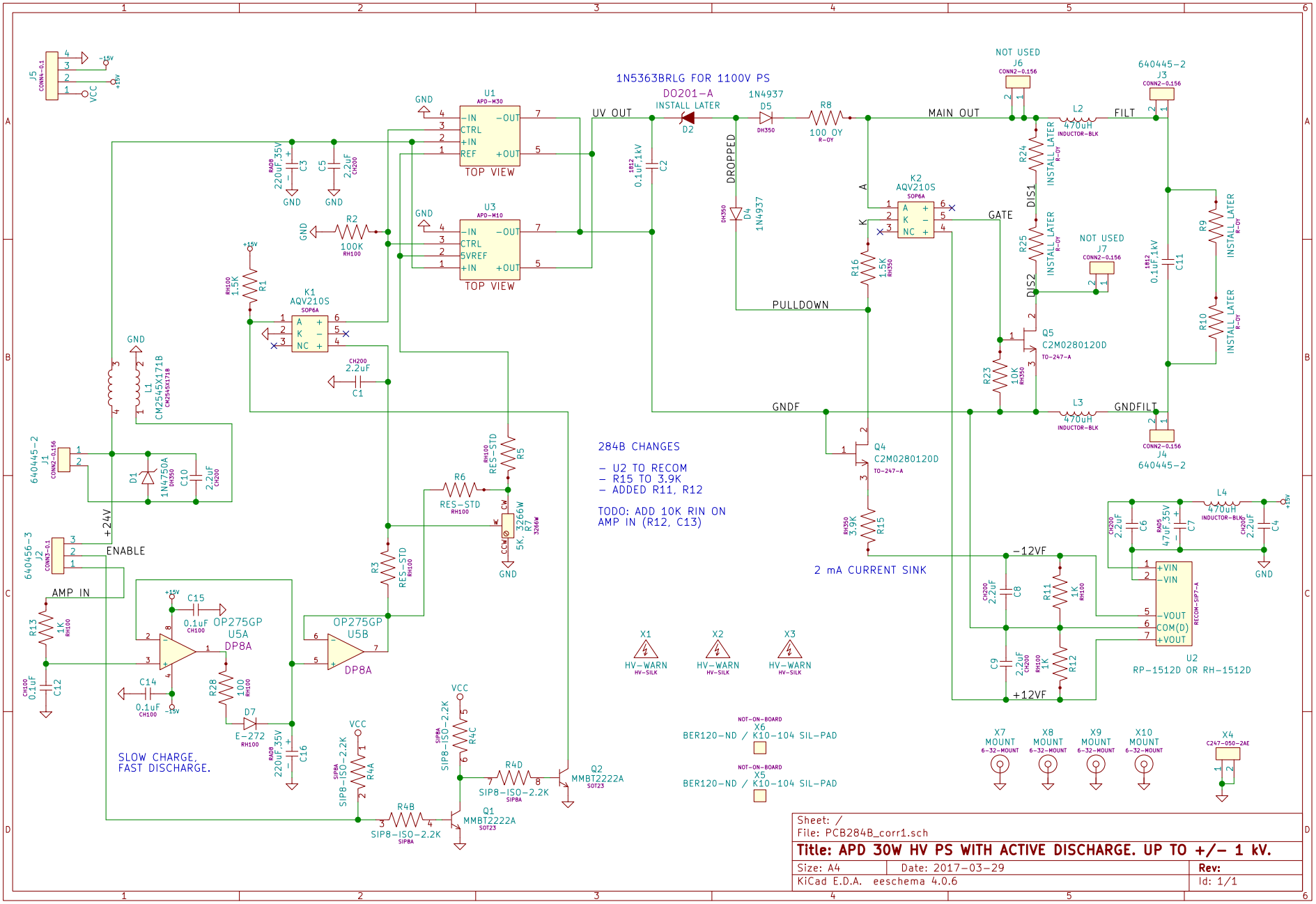

# PCB 183A-S AND 183A-P CAPACITOR BANKS

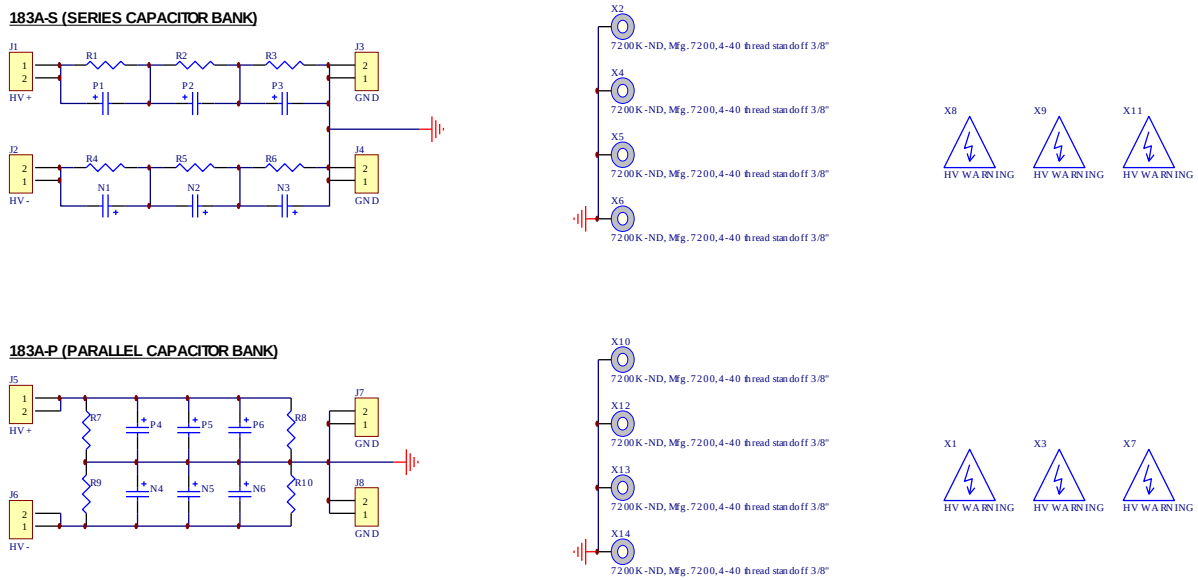


| | |
|---|---|
| PCB183 CAP BANKS | |
| Printed 19-Aug-2005 | Revision 1C |
| Z:\mjcfiles\pcb\183\hv-cap-bank.Ddb - pcb183a.sch | |

# PCB 94G - ALARM BOARD

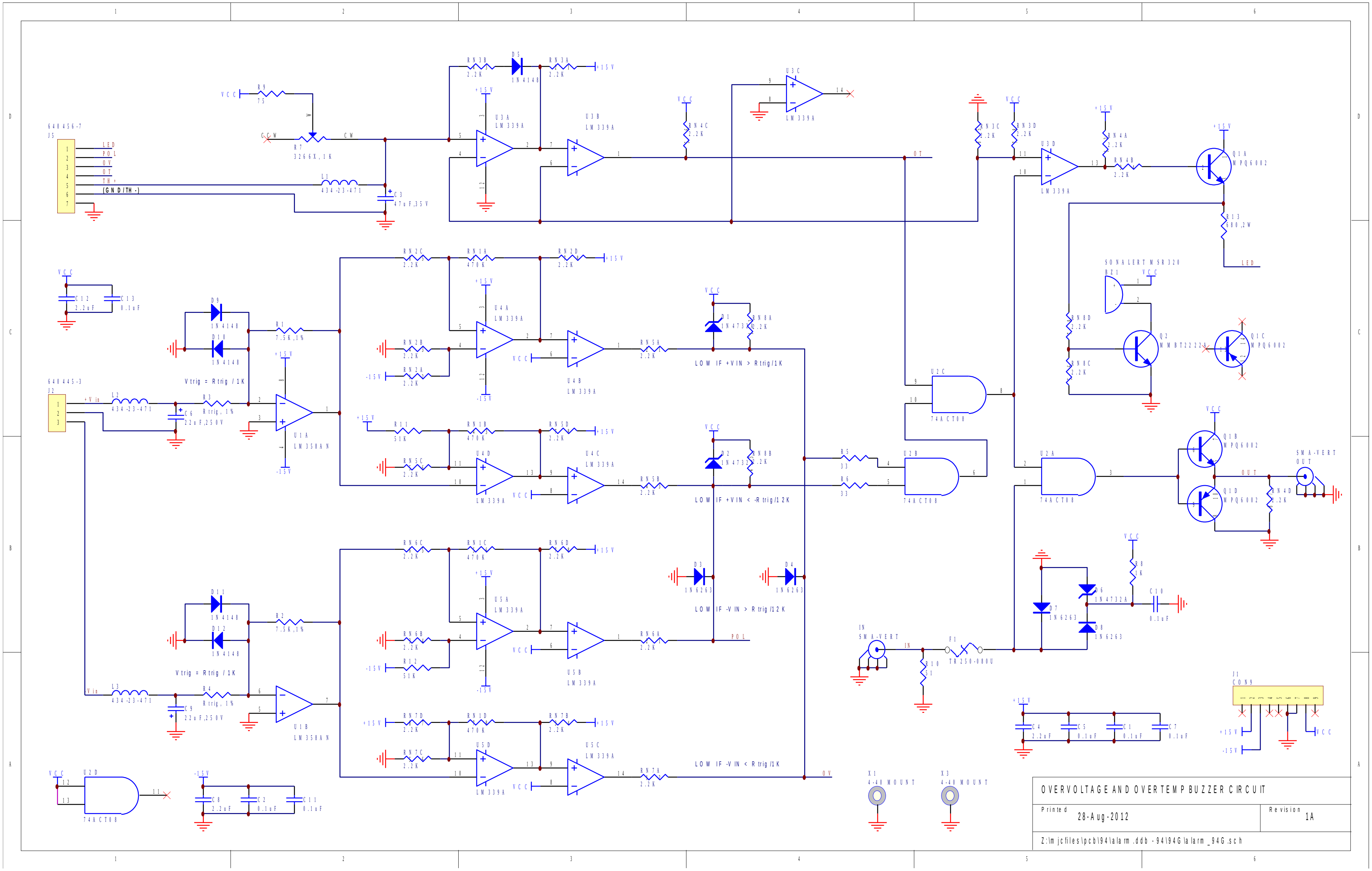

# PCB 104F - KEYPAD / DISPLAY BOARD, 1/3

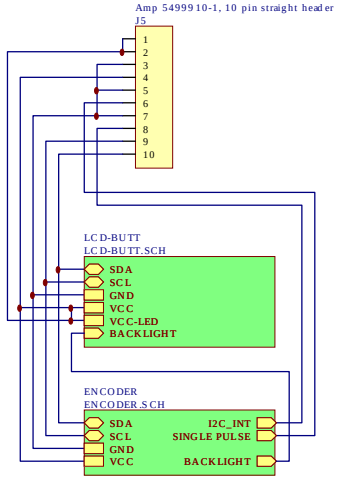


| | |
|---|---|
| Title | PANEL TOP-LEVEL SCHEMATIC |
| Date 25-Sep-2015 | Revision |
| Z:\mjcfiles\pcb\104f\keypad-2015.ddb - Documents\Panelbrd.prj | |

# PCB 104F - KEYPAD / DISPLAY BOARD, 2/3

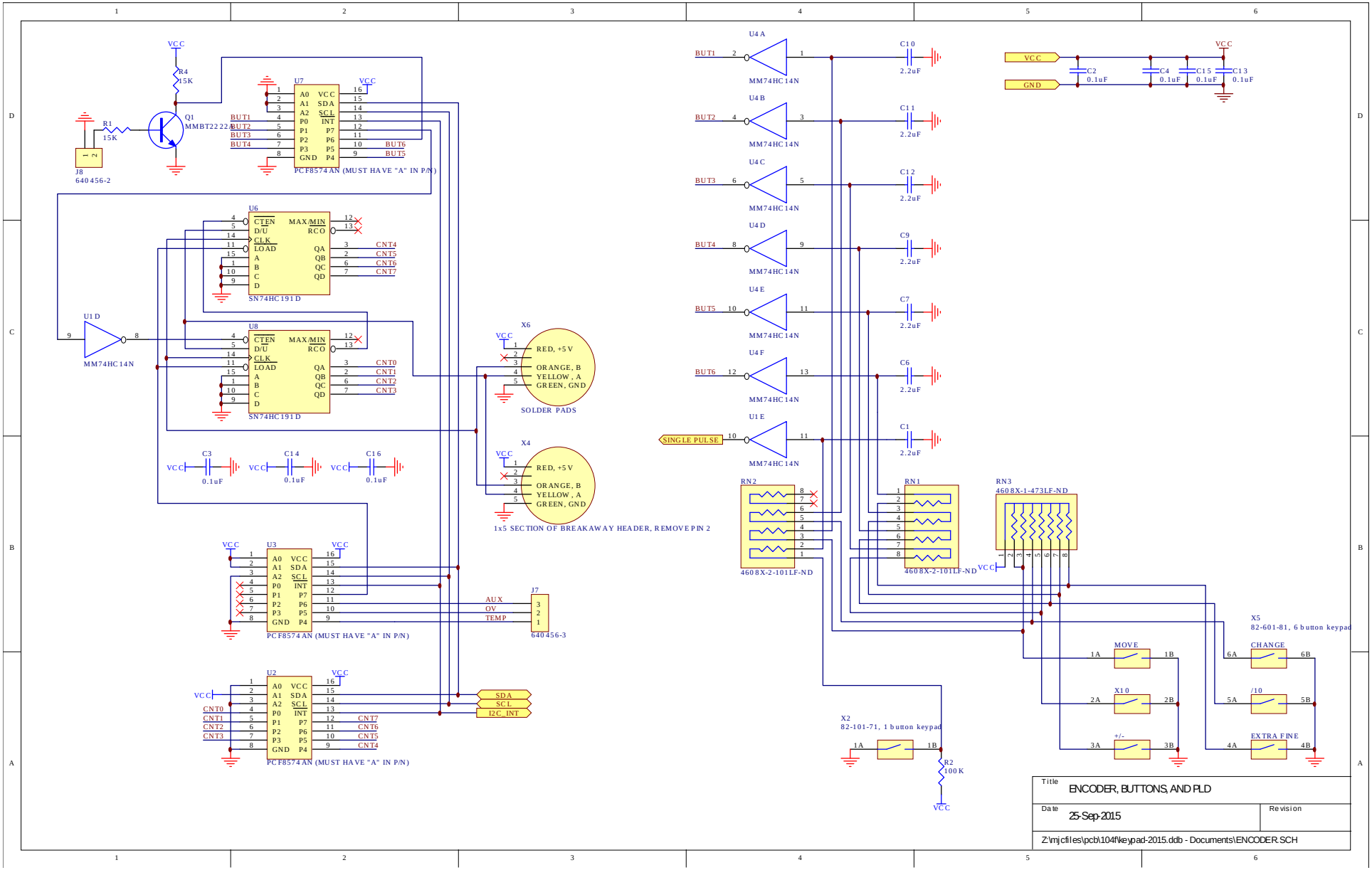

# PCB 104F - KEYPAD / DISPLAY BOARD, 3/3

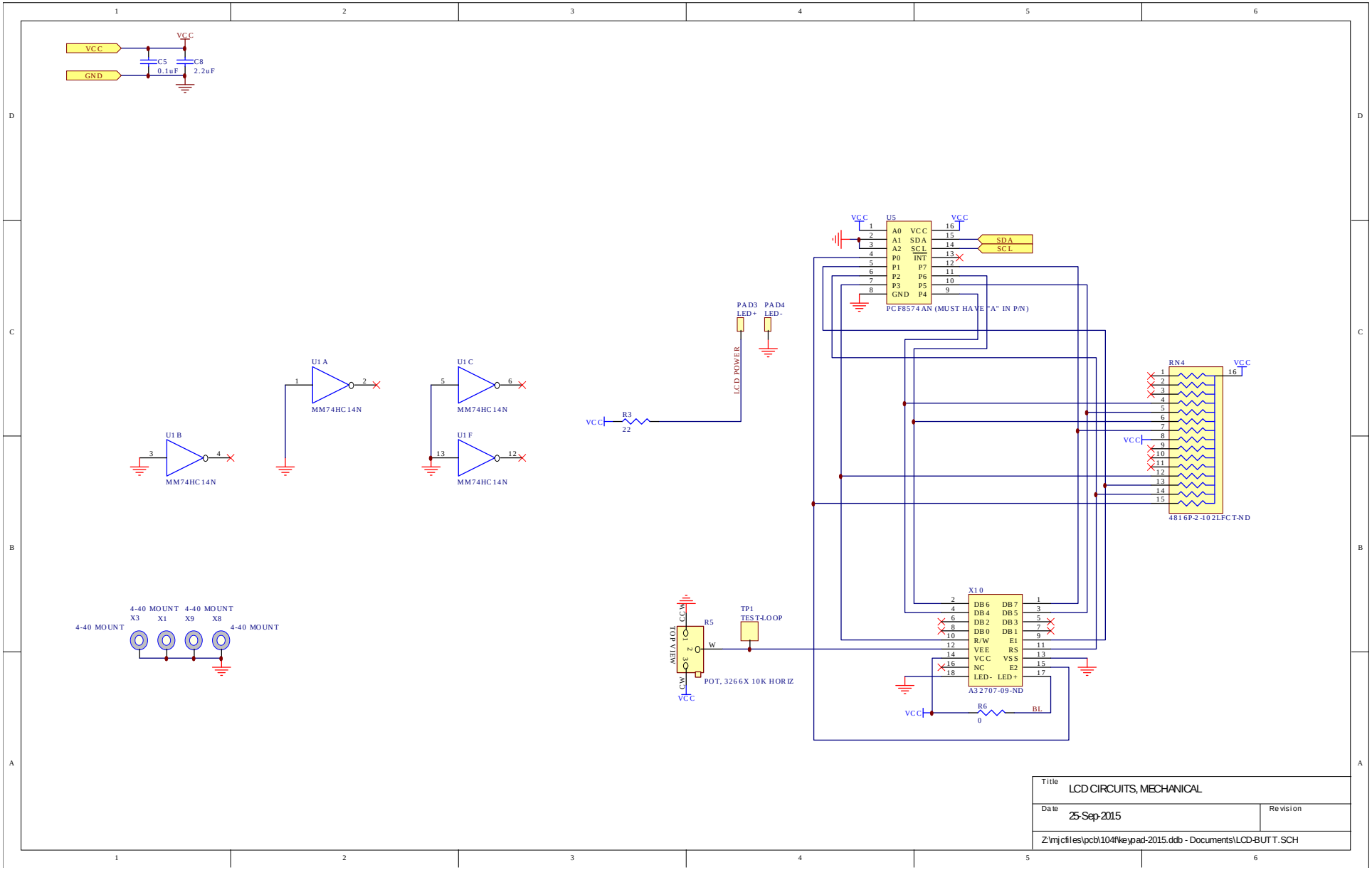


| | |
|---|---|
| Title | LCD CIRCUITS, MECHANICAL |
| Date | 25-Sep-2015 |
| Revision | |
| Z:\mjcfiles\pcb\104f\keypad-2015.ddb - Documents\LCD-BUTT.SCH | |

# FAN WIRING

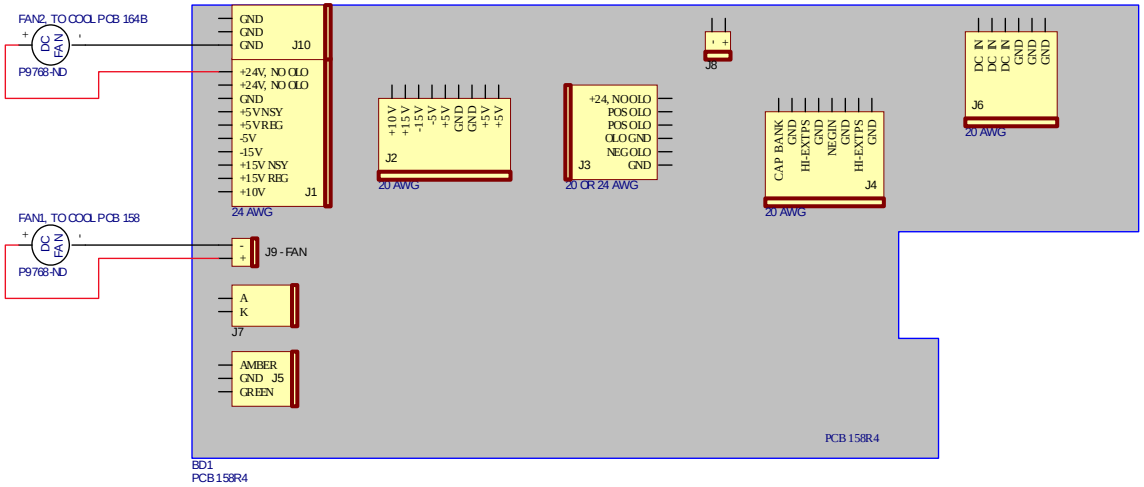


| | |
|---|---|
| Title | AVRZ-5W-B FANS |
| Date | 9-Jan-2020 |
| Revision | 6C |
| Z:\engineering\circuits\avr-N\avr-n.Ddb - AVRZ-5W-B\fans v6.sch | |

# MAIN WIRING

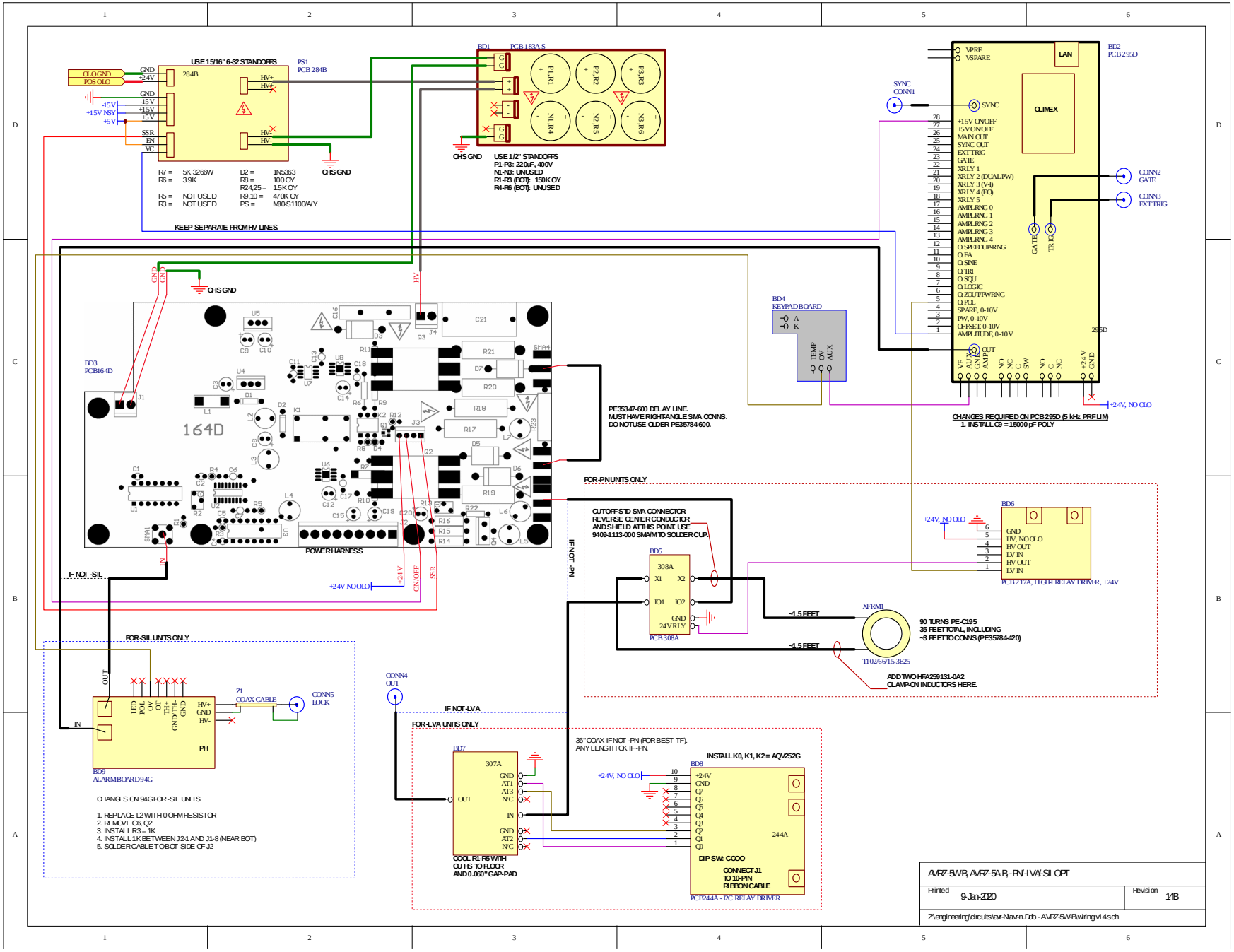
USE 15/16" 6-32 STANDOFFS
PS1
PCB 284B
284B
OLO GND
POS OLO
GND
+24V
-15 V
+15V
+15V NSY
+5V
SSR
EN
VC
HV+
HV2
HV2
HV-
CHS GND
R7 = 5K 3266W
R6 = 3.9K
R5 = NOT USED
R3 = NOT USED
D2 = 1N5363
R8 = 100 OY
R24,25 = 1.5K OY
R9,10 = 470K OY
PS = M80-S1100/A/Y
KEEP SEPARATE FROM HV LINES.
BD1
PCB 183A-S
P1,R1
P2,R2
P3,R3
N1,R4
N2,R5
N3,R6
CHS GND
USE 1/2" STANDOFFS
P1-P3: 220uF, 400V
N1-N3: UNUSED
R1-R3 (BOT): 150K OY
R4-R6 (BOT): UNUSED
BD2
PCB 295D
LAN
CLIMEX
VPRF
VSPARE
SYNC
CONN1
SYNC
+15V ON/OFF
+5V ON/OFF
MAIN OUT
SYNC OUT
EXT TRIG
GATE
XRLY 1
XRLY 2 (DUAL PW)
XRLY 3 (V-I)
XRLY 4 (EO)
XRLY 5
AMPLRNG 0
AMPLRNG 1
AMPLRNG 2
AMPLRNG 3
AMPLRNG 4
O SPEEDUP-RNG
O EA
O SINE
O TRI
O SQU
O LOGIC
O ZOUTPWRNG
O POL
SPARE, 0-10V
PW, 0-10V
OFFSET, 0-10V
AMPLITUDE, 0-10V
OUT
GATE
TRIG
CONN2
GATE
CONN3
EXT TRIG
VF
AUX
GN
AMP
NO
NC
C
SW
+24V
GND
+24V, NO OLO
CHANGES REQUIRED ON PCB 295D (5 kHz PRF LIM)
1. INSTALL C9 = 15000 pF POLY
CHS GND
BD3
PCB164D
164D
POWER HARNESS
PE35347-600 DELAY LINE.
MUST HAVE RIGHT ANGLE SMA CONNS.
DO NOT USE OLDER PE35784-600.
BD4
KEYPAD BOARD
A
K
TEMP
OV
AUX
IF NOT -SIL
IN
+24V NO OLO
+24V
ON/OFF
SSR
IF NOT -PN
FOR-PN UNITS ONLY
CUT OFF STD SMA CONNECTOR.
REVERSE CENTER CONDUCTOR
AND SHIELD AT THIS POINT. USE
9409-1113-000 SMA/M TO SOLDER CUP.
BD5
308A
X1
X2
IO1
IO2
GND
24V RLY
PCB 308A
~1.5 FEET
~1.5 FEET
XFRM1
90 TURNS PE-C195
35 FEET TOTAL, INCLUDING
~3 FEET TO CONNS (PE35784-420)
T1 02/66/15-3E25
ADD TWO HFA259131-0A2
CLAMP-ON INDUCTORS HERE.
BD6
+24V, NO OLO
GND
HV, NO OLO
HV OUT
LV IN
HV OUT
LV IN
PCB 217A, HIGH RELAY DRIVER, +24V
FOR-SIL UNITS ONLY
OUT
IN
LED
POL
OV
OT
TH+
GND/TH-
GND
HV+
GND
HV-
PH
BD9
ALARM BOARD 94G
Z1
COAX CABLE
CONN5
LOCK
CHANGES ON 94G FOR -SIL UNITS
1. REPLACE L2 WITH 0 OHM RESISTOR
2. REMOVE C6, Q2
3. INSTALL R3 = 1K
4. INSTALL 1K BETWEEN J2-1 AND J1-8 (NEAR BOT)
5. SOLDER CABLE TO BOT SIDE OF J2
CONN4
OUT
IF NOT -LVA
FOR-LVA UNITS ONLY
36" COAX IF NOT -PN (FOR BEST TF).
ANY LENGTH OK IF -PN.
BD7
307A
OUT
GND
AT1
AT3
N/C
IN
GND
AT2
N/C
COOL R1-R6 WITH
CU HS TO FLOOR
AND 0.060" GAP-PAD
INSTALL K0, K1, K2 = AQV252G
BD8
+24V, NO OLO
+24V
GND
Q7
Q6
Q5
Q4
Q3
Q2
Q1
Q0
244A
DIP SW: C0D0
CONNECT J1
TO 10-PIN
RIBBON CABLE
PCB 244A - DC RELAY DRIVER
AVRZ-5/WB, AVRZ-5A/B, -PN-LVA/-SIL OPT
Printed
9-Jan-2020
Revision
14B
Z:\engineering\circuits\avr-Nav-n.Dsb - AVRZ-5/WB wiring v1.4.sch

# PERFORMANCE CHECK SHEET