AVTECH ELECTROSYSTEMS LTD.
NANOSECOND WAVEFORM ELECTRONICS
SINCE 1975

info@avtechpulse.com
http://www.avtechpulse.com/

Tel: 888-670-8729 (USA & Canada)
or +1-613-686-6675 (Worldwide)

BOX 5120, LCD MERIVALE
OTTAWA, CANADA K2C3H5

INSTRUCTIONS

MODEL AVRK-4-B-DPF

750 VOLT DOUBLE-PULSE

HIGH PERFORMANCE PULSE GENERATOR

WITH IEEE 488.2 / RS-232 / ETHERNET CONTROL

SERIAL NUMBER: 14540

WARRANTY

Avtech Electrosystems Ltd. warrants products of its manufacture to be free from defects in material and workmanship under conditions of normal use. If, within one year after delivery to the original owner, and after prepaid return by the original owner, this Avtech product is found to be defective, Avtech shall at its option repair or replace said defective item. This warranty does not apply to units which have been dissembled, modified or subjected to conditions exceeding the applicable specifications or ratings. This warranty is the extent of the obligation assumed by Avtech with respect to this product and no other warranty or guarantee is either expressed or implied.

TECHNICAL SUPPORT

Phone: 888-670-8729 (USA & Canada)
or +1-613-686-6675 (Worldwide)

E-mail: info@avtechpulse.com
World Wide Web: http://www.avtechpulse.com

TABLE OF CONTENTS

WARRANTY.....2
TECHNICAL SUPPORT.....2
TABLE OF CONTENTS.....3
INTRODUCTION.....6
AVAILABLE OPTIONS.....9
-TR OPTION.....9
-LVA INTERNAL ATTENUATOR OPTION.....9
-OS DC OFFSET OPTION.....9
-SIL SAFETY INTERLOCK OPTION.....9
SPECIFICATIONS.....10
REGULATORY NOTES.....12
FCC PART 18.....12
EC DECLARATION OF CONFORMITY.....12
DIRECTIVE 2011/65/EU (RoHS).....13
DIRECTIVE 2002/96/EC (WEEE).....13
FIRMWARE LICENSING.....14
INSTALLATION.....15
VISUAL CHECK.....15
POWER RATINGS.....15
CONNECTION TO THE POWER SUPPLY.....15
PROTECTION FROM ELECTRIC SHOCK.....16
ENVIRONMENTAL CONDITIONS.....17
LABVIEW DRIVERS.....17
FUSES.....18
AC FUSE REPLACEMENT.....18
DC FUSE REPLACEMENT.....19
FUSE RATINGS.....19
FRONT PANEL CONTROLS.....20
REAR PANEL CONTROLS.....22
GENERAL INFORMATION.....24
BASIC PULSE CONTROL.....24
INTERNAL TRIGGER MODE.....24
SINGLE EXTERNAL TRIGGER MODE.....24

DOUBLE EXTERNAL TRIGGER MODE....25
POLARITY CONTROL....26
TRIGGER MODES....26
GATING MODES....27
PROTECTING YOUR INSTRUMENT....28
TURN OFF INSTRUMENT WHEN NOT IN USE....28
DO NOT EXCEED 1 kHz....28
USE A 50Ω LOAD....28
OPERATIONAL CHECK....29
PROGRAMMING YOUR PULSE GENERATOR....33
KEY PROGRAMMING COMMANDS....33
ALL PROGRAMMING COMMANDS....34
MECHANICAL INFORMATION....36
TOP COVER REMOVAL....36
RACK MOUNTING....36
ELECTROMAGNETIC INTERFERENCE....36
MAINTENANCE....37
REGULAR MAINTENANCE....37
CLEANING....37
TRIGGER DAMAGE....37
WIRING DIAGRAMS....38
WIRING OF AC POWER....38
WIRING OF DC POWER....39
PCB 158R7 - LOW VOLTAGE POWER SUPPLY....40
PCB 282C - HIGH VOLTAGE DC POWER SUPPLY....41
PCB 341A – INTERLOCK (-SIL UNITS)....42
PCB 216F - PRF/PW TWEAKING PCB....43
PCB 241F - SUPPLEMENTARY PULSE WIDTH CONTROL....44
PCB 205B - SECOND TIMING CHANNEL....45
PCB 317A - AMPL/PW BIAS....46
PG-N MODULE, MAIN PULSER CIRCUIT....47
AVX-R6 MODULE, POLARITY-INVERTING TRANSFORMER (-P AND -PN UNITS)....48
MON MODULE....49
PCB 104H - KEYPAD / DISPLAY BOARD....50
PCB 295G - MAIN CONTROL BOARD, 1 OF 13, TOP-LEVEL....51

PCB 295G - MAIN CONTROL BOARD, 2 OF 13, MICROCONTROLLER TOP-LEVEL.....52
PCB 295G - MAIN CONTROL BOARD, 3 OF 13, EMBEDDED CONTROLLER.....53
PCB 295G - MAIN CONTROL BOARD, 4 OF 13, GPIB INTERFACE.....54
PCB 295G - MAIN CONTROL BOARD, 5 OF 13, DACs.....55
PCB 295G - MAIN CONTROL BOARD, 6 OF 13, TIMING TOP-LEVEL.....56
PCB 295G - MAIN CONTROL BOARD, 7 OF 13, GATE CIRCUIT.....57
PCB 295G - MAIN CONTROL BOARD, 8 OF 13, OSCILLATOR.....58
PCB 295G - MAIN CONTROL BOARD, 9 OF 13, TTL OUTPUTS.....59
PCB 295G - MAIN CONTROL BOARD, 10 OF 13, DELAY CIRCUITS.....60
PCB 295G - MAIN CONTROL BOARD, 11 OF 13, PULSE WIDTH CIRCUIT.....61
PCB 295G - MAIN CONTROL BOARD, 12 OF 13, TRIGGER SELECT.....62
PCB 295G - MAIN CONTROL BOARD, 13 OF 13, SHIFT REGISTERS.....63
MAIN WIRING.....64
PERFORMANCE CHECKSHEET.....65

Manual Reference: /fileserver1/officefiles/instructword/avrk/AVRK-4-B-DPF,sn14540.odt.
Last modified March 25, 2025.
Copyright © 2025 Avtech Electrosystems Ltd, All Rights Reserved.

INTRODUCTION

The AVRK-4-B-DPF is a high-speed, high-voltage, pulse doublet generator with GPIB, RS232, and Ethernet ports for computer control.

The output is capable of generating pulse doublets, instead of single pulses. The first and second pulses in the doublet have independently variable amplitude (adjustable from <150V to 750V) and pulse width (adjustable from 6 ns to 20 ns). Both must have the same polarity.

Instruments with the "-P" option can generate positive pulses, whereas instruments with the "-N" option can generate negative pulses. Instruments with the "-PN" option have switchable polarity.

In the internal trigger mode, the delay of the first pulse is adjustable over a range of 0 to 1.0 seconds, relative to the SYNC output. The second pulse is delayed relative to the first by an adjustable setting of 150 ns to 1.0 seconds (not to exceed 50% of the period). The separation resolution varies, but it is always better than 0.15% of (programmed separation + 20 ns).

Two external trigger modes are provided. For the "Single External Trigger" mode, external trigger pulses are applied to one connector. Each external pulse triggers a pulse doublet, after a short fixed propagation delay (approximately 200 ns). The doublet amplitudes, pulse widths, and delays are controlled in the same manner as the internal trigger mode.

The "Double External Trigger" mode uses two external trigger connectors. A pulse on the first trigger connector (TRIG1) generates the first output pulse after a short fixed propagation delay and a variable delay (PROP1 + DLY1), with amplitude AMP1 and pulse width PW1. A pulse on the second trigger connector (TRIG2) generates the second output pulse after a short fixed propagation delay and a variable delay (PROP2 + DLY2), with amplitude AMP2 and pulse width PW2. As with the other modes, both output pulses appear on the same output connector. The user must ensure that the delay between the first output pulse and the second pulse is between 150 ns to 1s (and less than 50% of the period). The timing between the two pulses within the doublet is controlled DLY1 and DLY2 settings and the timing between the trigger pulses.

The three trigger modes are illustrated below.

Internal Trigger mode waveforms

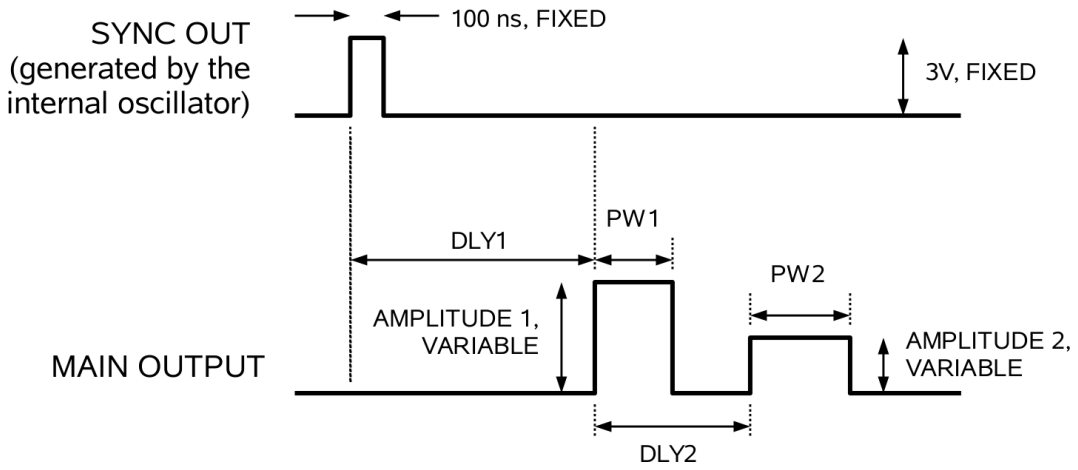

PW1, PW2, DLY1, DLY2, AMPLITUDE 1 and AMPLITUDE 2 are adjustable settings.

Single External Trigger mode waveforms:

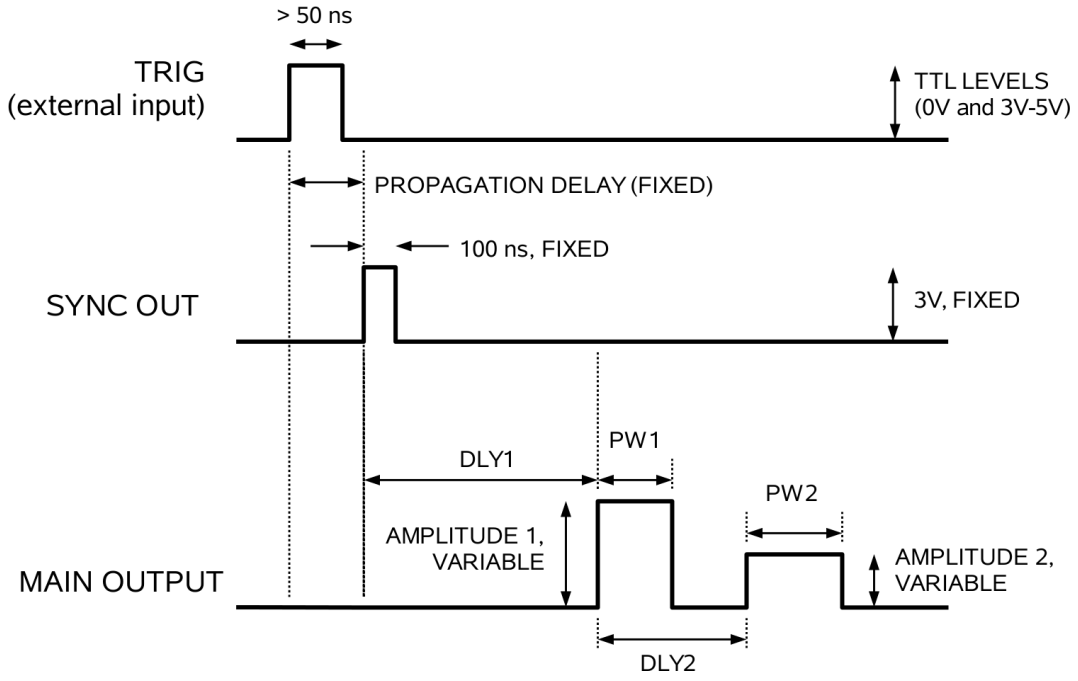

Double External Trigger mode waveforms:

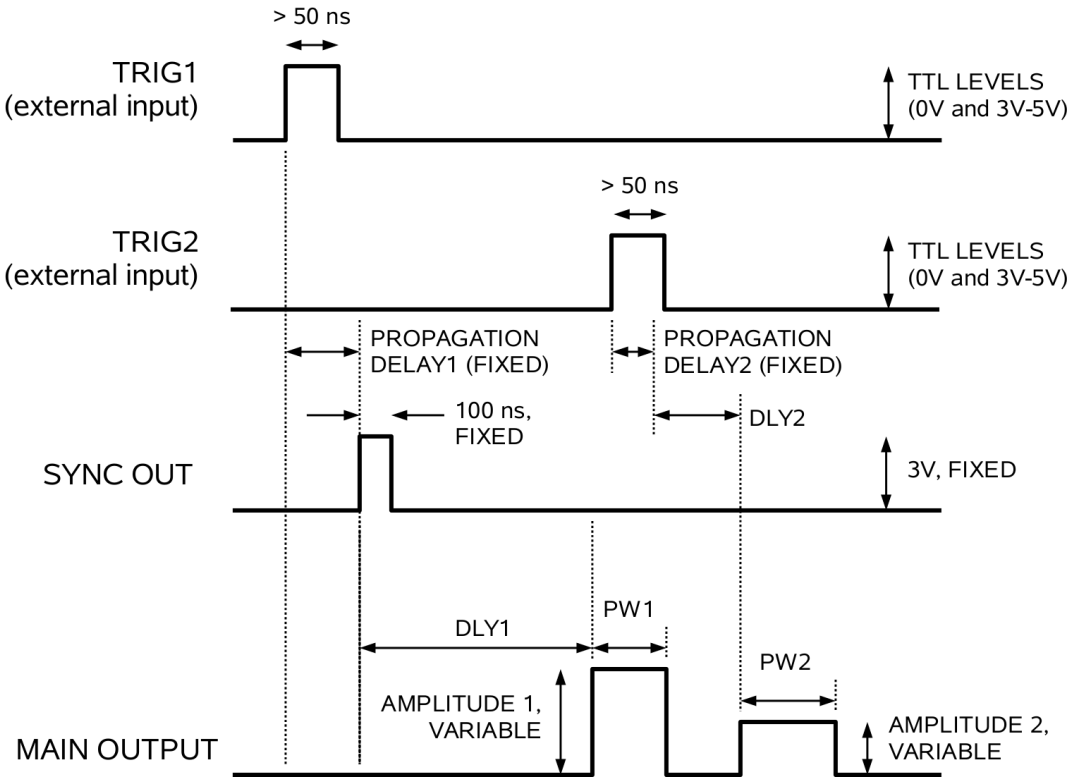

A 50 Ohm load is *required* for proper operation. The output stage may be damaged if the output is not terminated into a 50Ω load.

The AVRK-4-B-DPF is a highly flexible instrument. Aside from the internal trigger source, it can also be triggered or gated by external TTL-level signals. A front-panel pushbutton or a computer command can also be used to trigger the instrument.

The AVRK-4-B-DPF features front panel keyboard and adjust knob control of the output pulse parameters along with a four line by 40-character backlit LCD display of the output amplitude, pulse width, pulse repetition frequency, and delay. The instrument includes memory to store up to four complete instrument setups. The operator may use the front panel or the computer interface to store a complete “snapshot” of all key instrument settings, and recall this setup at a later time.

This instrument is intended for use in research, development, test and calibration laboratories by qualified personnel.

AVAILABLE OPTIONS

-TR OPTION

This option reduces the rise time specification from < 4 ns to < 2 ns.

-LVA INTERNAL ATTENUATOR OPTION

An internally-switched attenuator reduces the minimum operating amplitude to 4% of the maximum, from the standard 20%.

-OS DC OFFSET OPTION

This option adds a bias tee circuit on the output, with a rear-panel “OS” connector. This connector allows an externally generated DC offset to be added to the output. The desired DC offset is applied to this connector, which is connected to the output centre conductor through a high-quality RF inductor. Do not exceed ±50V, 250 mA. (Normally the current limit is more restrictive than the voltage limit.)

-SIL SAFETY INTERLOCK OPTION

This option adds a safety lock circuit on a rear-panel BNC connector. The signal pin of this safety lock BNC connector must be shorted to chassis ground by the user’s circuitry (the short must be capable of carrying 5 mA of current from an internal +5V/1kΩ DC source), otherwise the output will be switched off automatically. The connector shield is connected to chassis ground.

SPECIFICATIONS

Model:	AVRK-4-B-DPF[1]
Maximum amplitude[6]: (50Ω load required)	750 V
Usable amplitude range, standard units:	Range 1: < 20% to 100% of the maximum specified amplitude
Usable amplitude range, with -LVA option:	Range 1: < 20% to 100% of the maximum specified amplitude Range 2: < 4% to 20% of the maximum specified amplitude (The ranges are automatically selected based on the amplitude setting. The threshold percentages are approximate.)
Pulse width (FWHM):	6 – 20 ns
Rise time (20%-80%):	Standard: ≤ 4 ns With -TR option: ≤ 2 ns
Fall time (80%-20%):	*Varies with amplitude and pulse width[7]:*
Min PW, Min of ampl range:	≤ 6 ns
Min PW, Max of ampl range:	≤ 4 ns
Max PW, Min of ampl range:	≤ 10 ns
Max PW, Max of ampl range:	≤ 6 ns
PRF:	1 Hz to 1 kHz
Required load impedance:	50 Ohms[5]
Output impedance[3]:	Low (much less than 50 Ohms)
Polarity[2]:	Positive or negative or both (specify)
Propagation delay:	≤ 150 ns (Ext trig in to pulse out)
Jitter:	± 100 ps ± 0.03% of sync delay (Ext trig in to pulse out)
DC offset:	-OS option[4]: Apply required DC offset (± 50 Volts, 250 mA DC max) to rear-panel solder terminals
Standard trigger modes:	Internal trigger, external trigger (TTL level pulse, > 10 ns, 1 kΩ input impedance), front-panel "Single Pulse" pushbutton, or single pulse trigger via computer command.
Double-trigger mode:	Included with -DPF option[8]. Adds the ability to generate pulse doublets, instead of single pulses. The first and second pulses in the doublet have independently variable amplitude and pulse width. Both must have the same polarity. The second pulse will be delayed relative to the first by a minimum of 150 ns, and a maximum of 1 second (not to exceed 50% of the period). This delay is adjustable in the "Single External Trigger" and "Single External Trigger" modes. The delay is determined by the trigger signals in the "Double External Trigger mode".
Variable delay:	0 to 1.0 seconds (sync out to main out), for all trigger modes (including external trigger).
Sync output:	> +3 Volts, > 50 ns, will drive 50 Ohm loads
Gate input:	Synchronous or asynchronous, active high or low, switchable. Suppresses triggering when active.
Monitor output:	Included. Provides a 20 dB attenuated coincident replica of the main output. Requires a 50 Ohm load, if used.
Safety interlock option[9]:	This option adds a safety lock circuit on a rear-panel BNC connector. The signal pin of this safety lock BNC connector must be shorted to chassis ground by the user's circuitry (the short must be capable of carrying 5 mA of current from an internal +5V/1kΩ DC source), otherwise the output will be switched off automatically. The connector shield is connected to chassis ground.
Connectors:	BNC
GPIB & RS-232 control[1]:	Standard on -B units.
Ethernet port, for remote control using VXI-11.3, ssh, telnet, & web:	Included. Recommended as a modern alternative to GPIB / RS-232. See http://www.avtechpulse.com/options/vxi for details.
Settings resolution:	The resolution of the timing parameters (pulse width, delay, period) varies, but is always better than 0.15% of (|set value| + 20 ns). The amplitude resolution is < 0.1% of the maximum amplitude.
Settings accuracy:	Not specified. The pulse width setting experiences some thermal drift and interaction with the amplitude setting. For this reason, the actual output characteristics should be verified by measuring the main output or the monitor output. For high-accuracy applications requiring traceable calibration, verify the output with a calibrated oscilloscope.
Included pulse transformers:	None
Power requirements:	100 - 240 Volts, 50 - 60 Hz
Dimensions (H x W x D):	100 mm x 430 mm x 375 mm (3.9" x 17" x 14.8")
Rack-mount kit:	Optional. Add -R5 to the model number.
Temperature range:	+5°C to +40°C

1) -B suffix indicates IEEE-488.2 GPIB and RS-232 control of amplitude, pulse width, PRF and delay. (See http://www.avtechpulse.com/gpib).
2) Indicate desired polarity by suffixing model number with -P or -N (i.e. positive or negative) or -PN for the dual-polarity option (one output with switchable polarity).
3) This is the input in series with the output, internally. Since the output impedance is not 50 Ohms, the load impedance must be 50 Ohms, or transmission line reflections will occur.
4) For DC offset option suffix model number with -OS.
5) A 50 Ohm load is required. Other loads may damage the instrument. Consult Avtech (info@avtechpulse.com) if you need to drive other load impedances.
6) The maximum amplitude may fall by up to 10% at minimum pulse width, as the rise and fall times become comparable to the pulse width.
7) The fall time varies with amplitude (higher amplitudes produce faster fall times) and pulse width (wider pulse widths produce slower fall times). These values are the limits for operation at minimum and maximum specified amplitudes and pulse widths. Fall times for other settings will lie between these values.
8) Add the -DPF model number suffix to specify the double pulse option.
9) Add the -SIL model number suffix to specify the safety interlock option.

REGULATORY NOTES

FCC PART 18

This device complies with part 18 of the FCC rules for non-consumer industrial, scientific and medical (ISM) equipment.

This instrument is enclosed in a rugged metal chassis and uses a filtered power entry module (where applicable). The main output signal is provided on a shielded connector that is intended to be used with shielded coaxial cabling and a shielded load. Under these conditions, the interference potential of this instrument is low.

If interference is observed, check that appropriate well-shielded cabling is used on the output connectors. Contact Avtech (info@avtechpulse.com) for advice if you are unsure of the most appropriate cabling. Also, check that your load is adequately shielded. It may be necessary to enclose the load in a metal enclosure.

If any of the connectors on the instrument are unused, they should be covered with shielded metal “dust caps” to reduce the interference potential.

This instrument does not normally require regular maintenance to minimize interference potential. However, if loose hardware or connectors are noted, they should be tightened. Contact Avtech (info@avtechpulse.com) if you require assistance.

EC DECLARATION OF CONFORMITY

We Avtech Electrosystems Ltd.
P.O. Box 5120, LCD Merivale
Ottawa, Ontario
Canada K2C 3H5

declare that this pulse generator meets the intent of Directive 2014/30/EU for Electromagnetic Compatibility. Compliance pertains to the following specifications as listed in the official Journal of the European Communities:

EN 50081-1 Emission

EN 50082-1 Immunity

and that this pulse generator meets the intent of the Low Voltage Directive 2014/35/EU. Compliance pertains to the following specifications as listed in the official Journal of the European Communities:

EN 61010-1:2010+A1:2019, Safety requirements for electrical equipment for measurement, control, and laboratory use

DIRECTIVE 2011/65/EU (RoHS)

We Avtech Electrosystems Ltd.
P.O. Box 5120, LCD Merivale
Ottawa, Ontario
Canada K2C 3H5

declare that, to the best of our knowledge, all electrical and electronic equipment (EEE) sold by the company are in compliance with Directive 2011/65/EU of the European Parliament and of the Council of 8 June 2011 on the restriction of the use of certain hazardous substances in electrical and electronic equipment (also known as “RoHS Recast”). In addition, this declaration of conformity is issued under the sole responsibility of Avtech Electrosystems Ltd. Specifically, products manufactured do not contain the substances listed in the table below in concentrations greater than the listed maximum value.

Material/Substance	*Threshold level*
Lead (Pb)	< 1000 ppm (0.1% by mass)
Mercury (Hg)	< 1000 ppm (0.1% by mass)
Hexavalent Chromium (Cr6+)	< 1000 ppm (0.1% by mass)
Polybrominated Biphenyls (PBB)	< 1000 ppm (0.1% by mass)
Polybrominated Diphenyl ethers (PBDE)	< 1000 ppm (0.1% by mass)
Cadmium (Cd)	< 100 ppm (0.01% by mass)
Bis(2-ethylhexyl) phthalate (DEHP)	< 1000 ppm (0.1% by mass)
Butyl benzyl phthalate (BBP)	< 1000 ppm (0.1% by mass)
Dibutyl phthalate (DBP)	< 1000 ppm (0.1% by mass)
Diisobutyl phthalate (DIBP)	< 1000 ppm (0.1% by mass)

DIRECTIVE 2002/96/EC (WEEE)

European customers who have purchased this equipment directly from Avtech will have completed a “WEEE Responsibility Agreement” form, accepting responsibility for WEEE

compliance (as mandated in Directive 2002/96/EC of the European Union and local laws) on behalf of the customer, as provided for under Article 9 of Directive 2002/96/EC.

Customers who have purchased Avtech equipment through local representatives should consult with the representative to determine who has responsibility for WEEE compliance. Normally, such responsibilities with lie with the representative, unless other arrangements (under Article 9) have been made.

Requirements for WEEE compliance may include registration of products with local governments, reporting of recycling activities to local governments, and financing of recycling activities.

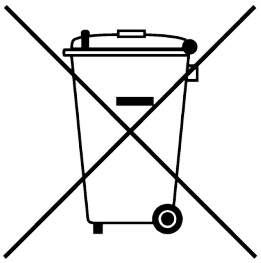

FIRMWARE LICENSING

This instrument uses open-source software internally, and is built on a Fedora Linux operating system.

Some of this software requires that the source code be made available to the user as a condition of its licensing. The source code for programs used by Fedora is freely available at https://src.fedoraproject.org/.

The source code for modifications implemented by Avtech, and for Avtech-specific programs, is available at https://www.avtechpulse.com/cgit/Instrument.git/.

INSTALLATION

VISUAL CHECK

After unpacking the instrument, examine to ensure that it has not been damaged in shipment. Visually inspect all connectors, knobs, liquid crystal displays (LCDs), and the handles. Confirm that a power cord, a GPIB cable, and two instrumentation manuals (this manual and the “Programming Manual for -B Instruments”) are with the instrument. If the instrument has been damaged, file a claim immediately with the company that transported the instrument.

POWER RATINGS

This instrument is intended to operate from 100 - 240 V, 50 - 60 Hz.

The maximum power consumption is 90 Watts. Please see the “FUSES” section for information about the appropriate AC and DC fuses.

This instrument is an “Installation Category II” instrument, intended for operation from a normal single-phase supply.

CONNECTION TO THE POWER SUPPLY

An IEC-320 three-pronged recessed male socket is provided on the back panel for AC power connection to the instrument. One end of the detachable power cord that is supplied with the instrument plugs into this socket. The other end of the detachable power cord plugs into the local mains supply. Use only the cable supplied with the instrument. The mains supply must be earthed, and the cord used to connect the instrument to the mains supply must provide an earth connection. (The supplied cord does this.)

⚠ Warning: Failure to use a grounded outlet may result in injury or death due to electric shock. This product uses a power cord with a ground connection. It must be connected to a properly grounded outlet. The instrument chassis is connected to the ground wire in the power cord.

The table below describes the power cord that is normally supplied with this instrument, depending on the destination region:

Destination Region	Description	Option	Manufacturer	Part Number
United Kingdom, Hong Kong, Singapore, Malaysia	BS 1363, 230V, 50 Hz	-AC00	Qualtek	370001-E01
Australia, New Zealand	AS 3112:2000, 230-240V, 50 Hz	-AC01	Qualtek	374003-A01
Continental Europe, Korea, Indonesia, Russia	European CEE 7/7 “Schuko” 230V, 50 Hz	-AC02	Qualtek	364002-D01
North America, Taiwan	NEMA 5-15, 120V, 60 Hz	-AC03	Qualtek	312007-01
Switzerland	SEV 1011, 230V, 50 Hz	-AC06	Qualtek	378001-E01
South Africa, India	SABS 164-1, 220-250V, 50 Hz	-AC17	Volex	2131H 10 C3
Japan	JIS 8303, 100V, 50-60 Hz	-AC18	Qualtek	397002-01
Israel	SI 32, 220V, 50 Hz	-AC19	Qualtek	398001-01
China	GB 1002-1 / 2099-1, 220V, 50 Hz	-AC22	Qualtek	399012-01

PROTECTION FROM ELECTRIC SHOCK

⚠ Operators of this instrument must be protected from electric shock at all times. The owner must ensure that operators are prevented access and/or are insulated from every connection point. In some cases, connections must be exposed to potential human contact. Operators must be trained to protect themselves from the risk of electric shock. This instrument is intended for use by qualified personnel who recognize shock hazards and are familiar with safety precautions required to avoid possibly injury. In particular, operators should:

1. Keep exposed high-voltage wiring to an absolute minimum.

2. Wherever possible, use shielded connectors and cabling.

3. Connect and disconnect loads and cables only when the instrument is turned off.

4. Keep in mind that all cables, connectors, oscilloscope probes, and loads must have an appropriate voltage rating.

5. Do not attempt any repairs on the instrument, beyond the fuse replacement procedures described in this manual. Contact Avtech technical support (see page 2 for contact information) if the instrument requires servicing. Service is to be performed solely by qualified service personnel.

ENVIRONMENTAL CONDITIONS

This instrument is intended for use under the following conditions:

1. indoor use;
2. altitude up to 2 000 m;
3. temperature 5 °C to 40 °C;
4. maximum relative humidity 80 % for temperatures up to 31 °C decreasing linearly to 50 % relative humidity at 40 °C;
5. Mains supply voltage fluctuations up to ±10 % of the nominal voltage;
6. no pollution or only dry, non-conductive pollution.

LABVIEW DRIVERS

A LabVIEW driver for this instrument is available for download on the Avtech web site, at http://www.avtechpulse.com/labview. A copy is also available in National Instruments' Instrument Driver Library at http://www.natinst.com/.

FUSES

This instrument contains four fuses. All are accessible from the rear-panel. Two protect the AC prime power input, and two protect the internal DC power supplies. The locations of the fuses on the rear panel are shown in the figure below:

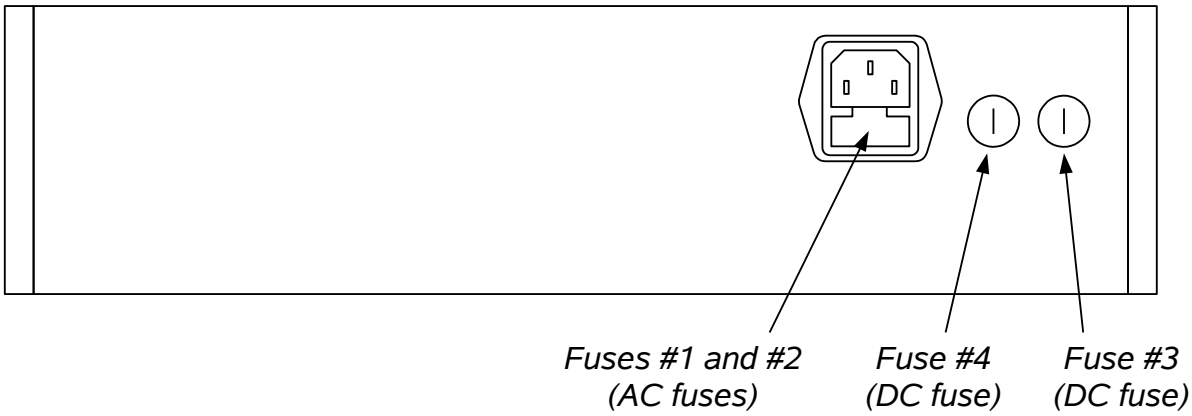

AC FUSE REPLACEMENT

To physically access the AC fuses, the power cord must be detached from the rear panel of the instrument. The fuse drawer may then be extracted using a small flat-head screwdriver, as shown below:

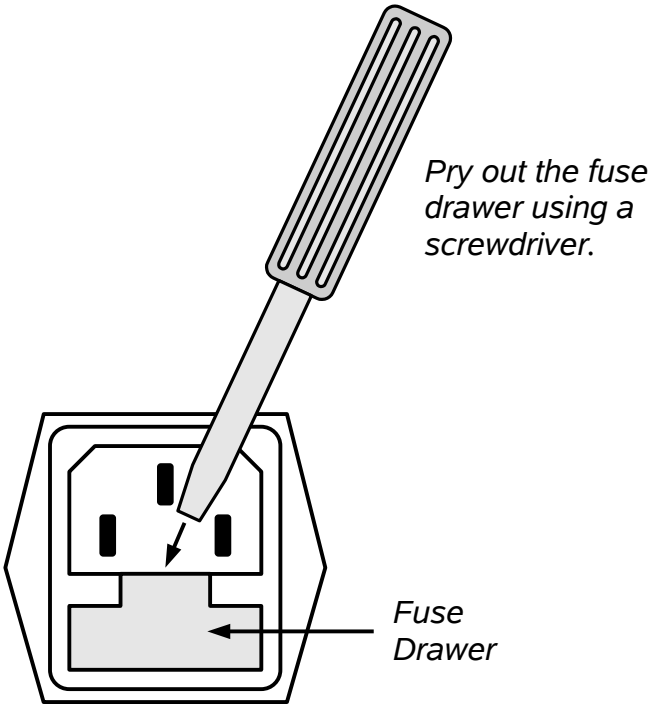

DC FUSE REPLACEMENT

The DC fuses may be replaced by inserting the tip of a flat-head screwdriver into the fuse holder slot, and rotating the slot counter-clockwise. The fuse and its carrier will then pop out.

FUSE RATINGS

The following table lists the required fuses:

Fuses	Nominal Mains Voltage	Rating	Case Size	Recommended Replacement Part	
				Littelfuse Part Number	Digi-Key Stock Number
#1, #2 (AC)	115 V	0.8A, 250V, Time-Delay	5×20 mm	0218.800HXP	F2418-ND
	230 V	0.5A, 250V, Time-Delay	5×20 mm	0218.500HXP	F2416-ND
#3 (DC)	N/A	1.6A, 250V, Time-Delay	5×20 mm	021801.6HXP	F2424-ND
#4 (DC)	N/A	2.0A, 250V, Time-Delay	5×20 mm	0218002.HXP	F2420-ND

The recommended fuse manufacturer is Littelfuse (http://www.littelfuse.com).

Replacement fuses may be easily obtained from Digi-Key (http://www.digikey.com) and other distributors.

FRONT PANEL CONTROLS

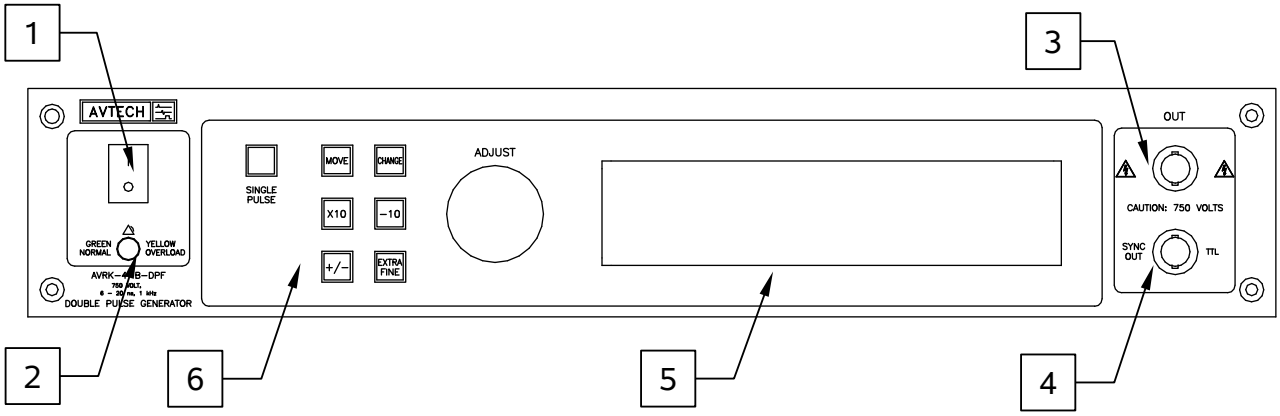

1. POWER Switch. This is the main power switch. When turning the instrument on, there is normally a delay of 10 seconds before anything is shown on the main display, as the internal operating system boots up.

2. OVERLOAD Indicator. When the instrument is powered, this indicator is normally green, indicating normal operation. If this indicator is yellow, an internal automatic overload protection circuit has been tripped. If the unit is overloaded (by operating at an exceedingly high duty cycle or by operating into a very low impedance), the protective circuit will disable the output of the instrument and turn the indicator light yellow. The light will stay yellow (i.e. output disabled) for about 5 seconds after which the instrument will attempt to re-enable the output (i.e. light green) for about 1 second. If the overload condition persists, the output will be disabled again (i.e. light yellow) for another 5 seconds. If the overload condition has been removed, the instrument will resume normal operation.

   This overload indicator may flash yellow briefly at start-up. This is not a cause for concern.

3. OUT CONNECTOR. This BNC connector provides the main output signal, into load impedances of 50Ω.

   ⚠ Caution: Pulsed voltages as high as ±750V may be present on the center conductor of this output connector. Avoid touching this conductor. Connect to this connector using standard coaxial cable, to ensure that the center conductor is not exposed.

4. SYNC OUT. This connector supplies a SYNC output that can be used to trigger other equipment, particularly oscilloscopes. This signal leads (or lags) the main output by a duration set by the "DELAY" controls and has an approximate amplitude of +3 Volts to R_L > 50Ω with a pulse width of approximately 100 ns.

5. LIQUID CRYSTAL DISPLAY (LCD). This LCD is used in conjunction with the keypad to change the instrument settings. Normally, the main menu is displayed, which lists

the key adjustable parameters and their current values. The “Programming Manual for -B Instruments” describes the menus and submenus in detail.

6. KEYPAD.

Control Name	Function
MOVE	This moves the arrow pointer on the display.
CHANGE	This is used to enter the submenu, or to select the operating mode, pointed to by the arrow pointer.
×10	If one of the adjustable numeric parameters is displayed, this increases the setting by a factor of ten.
÷10	If one of the adjustable numeric parameters is displayed, this decreases the setting by a factor of ten.
+/-	If one of the adjustable numeric parameters is displayed, and this parameter can be both positive or negative, this changes the sign of the parameter.
EXTRA FINE	This changes the step size of the ADJUST knob. In the extra-fine mode, the step size is twenty times finer than in the normal mode. This button switches between the two step sizes.
ADJUST	This large knob adjusts the value of any displayed numeric adjustable values, such as frequency, pulse width, etc. The adjust step size is set by the "EXTRA FINE" button. When the main menu is displayed, this knob can be used to move the arrow pointer.

REAR PANEL CONTROLS

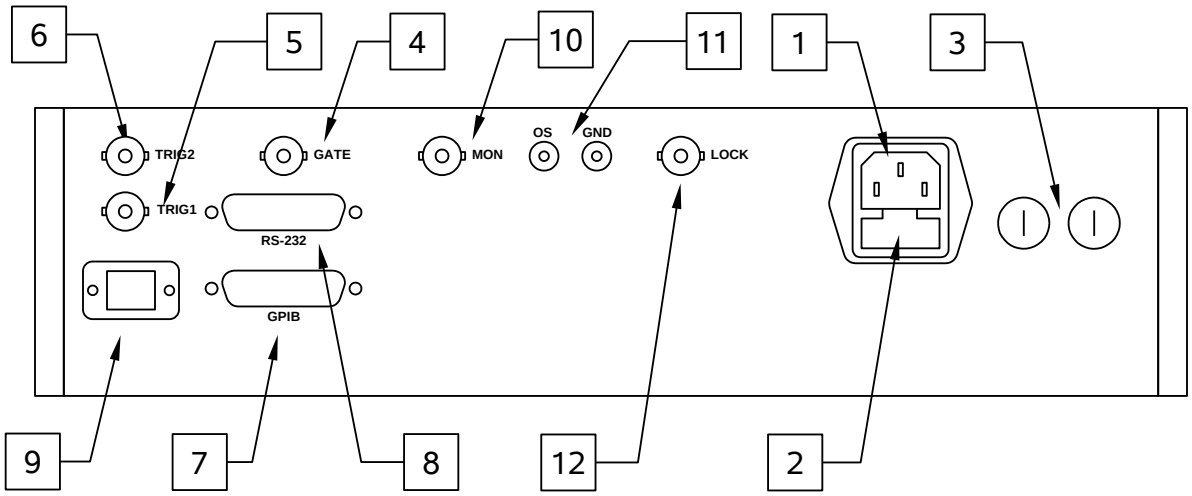

Note: some connectors may be in different positions than shown above, depending on the exact combination of options ordered.

1. AC POWER INPUT. An IEC-320 C14 three-pronged recessed male socket is provided on the back panel for AC power connection to the instrument. One end of the detachable power cord that is supplied with the instrument plugs into this socket.

2. AC FUSE DRAWER. The two fuses that protect the AC input are located in this drawer. Please see the “FUSES” section of this manual for more information.

3. DC FUSES. These two fuses protect the internal DC power supplies. Please see the “FUSES” sections of this manual for more information.

4. GATE. This TTL-level (0 and +5V) logic input can be used to gate the triggering of the instrument. This input can be either active high or active low, depending on the front panel settings or programming commands. (The instrument triggers normally when this input is unconnected). When set to active high mode, this input is pulled-down to ground by a 1 kΩ resistor. When set to active low mode, this input is pulled-up to +5V by a 1 kΩ resistor.

5. TRIG1. This TTL-level (0 and +5V) logic input can be used to trigger the instrument, if the instrument is set to triggering externally. The instrument triggers on the rising edge of this input. The input impedance of this input is 1 kΩ. (Depending on the length of cable attached to this input, and the source driving it, it may be desirable to add a coaxial 50 Ohm terminator to this input to provide a proper transmission line termination. The Pasternack (www.pasternack.com) PE6008-50 BNC feed-thru 50

Ohm terminator is suggested for this purpose.)

6. TRIG2. This TTL-level (0 and +5V) logic input can be used to trigger the instrument, if the instrument is set to triggering externally. The instrument triggers on the rising edge of this input. The input impedance of this input is 1 kΩ. (Depending on the length of cable attached to this input, and the source driving it, it may be desirable to add a coaxial 50 Ohm terminator to this input to provide a proper transmission line termination. The Pasternack (www.pasternack.com) PE6008-50 BNC feed-thru 50 Ohm terminator is suggested for this purpose.)

7. GPIB Connector. A standard GPIB cable can be attached to this connector to allow the instrument to be computer-controlled. See the "Programming Manual for -B Instruments" for more details on GPIB control.

8. RS-232 Connector. A standard serial cable with a 25-pin male connector can be attached to this connector to allow the instrument to be computer-controlled. A user name ("admin") and a password ("default", as shipped from the factory) are required when logging into a serial terminal session. The internal controller attempts to auto-sense the parity setting. It may be necessary to send a few return characters before attempting a login in order to provide enough data to allow this auto-sensing to work. (A standard Linux "agetty" process is used to implement serial control internally.) See the "Programming Manual for -B Instruments" for more details on RS-232 control.

9. Network Connector. This Ethernet connector allows the instrument to be remotely controlled using the VXI-11.3, ssh (secure shell), telnet, and http (web) protocols. See the "Programming Manual for -B Instruments" for more details.

10. MON Connector. The monitor output provides an attenuated replica (÷10) of the voltage on the main output. The monitor output is designed to operate into a 50 Ohm load.

11. OS Connector. (Optional feature. Present on -OS units only). This connector allows an externally generated DC offset to be added to the output. The desired DC offset is applied to this connector, which is connected to the output centre conductor through a high-quality RF inductor. Do not exceed ±50V, 250 mA. (Normally the current limit is more restrictive than the voltage limit.) An adjacent ground terminal is also provided.

12. LOCK Connector. (Optional feature. Present on -SIL units only.) The signal pin of this safety lock BNC connector must be shorted to chassis ground by the user's circuitry (the short must be capable of carrying 5 mA of current from an internal +5V/1kΩ DC source), otherwise the output will be switched off automatically. The connector shield is connected to chassis ground.

GENERAL INFORMATION

BASIC PULSE CONTROL

The output is capable of generating pulse doublets, instead of single pulses. The first and second pulses in the doublet have independently variable amplitude (adjustable from < 150V to 750V) and pulse width (adjustable from 6 ns to 20 ns). Both must have the same polarity.

INTERNAL TRIGGER MODE

In the internal trigger mode, the delay of the first pulse is adjustable over a range of 0 to 1.0 seconds, relative to the SYNC output. The second pulse is delayed relative to the first by an adjustable setting of 150 ns to 1.0 seconds (not to exceed 50% of the period). The separation resolution varies, but it is always better than 0.15% of (programmed separation + 20 ns).

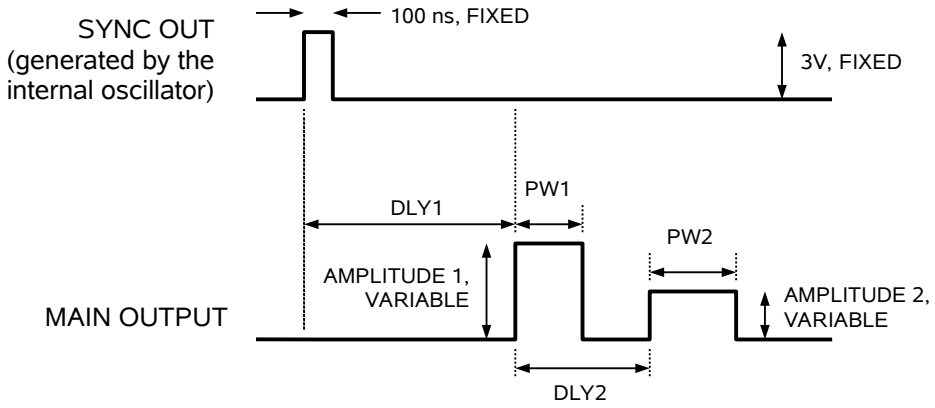

PW1, PW2, DLY1, DLY2, AMPLITUDE 1 and AMPLITUDE 2 are adjustable settings.

SINGLE EXTERNAL TRIGGER MODE

Two external trigger modes are provided. For the “Single External Trigger” mode, external trigger pulses are applied to one connector. Each external pulse triggers a pulse doublet, after a short fixed propagation delay (approximately 200 ns). The doublet amplitudes, pulse widths, and delays are controlled in the same manner as the internal trigger mode.

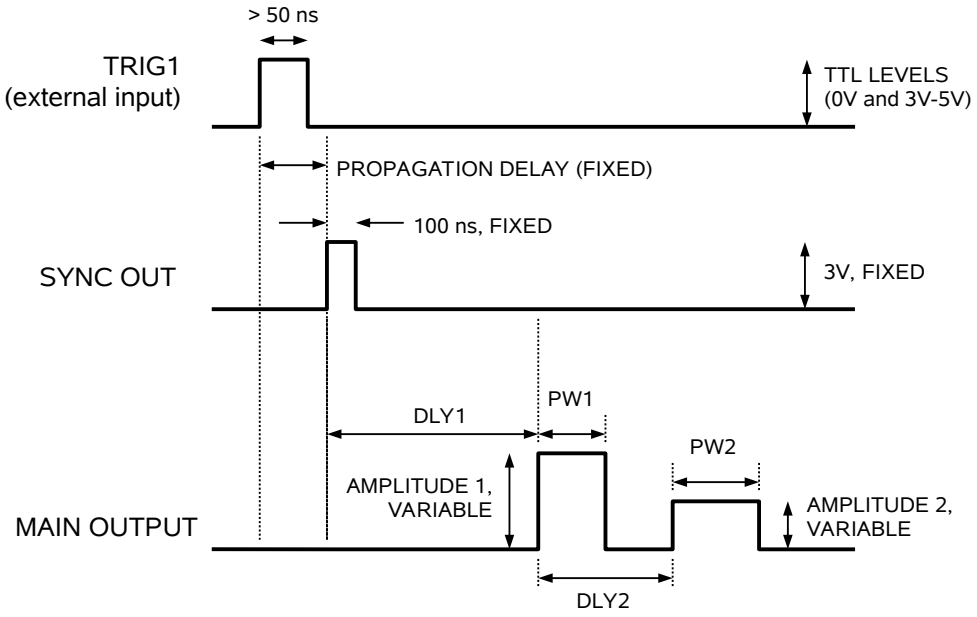

DOUBLE EXTERNAL TRIGGER MODE

The “Double External Trigger” mode uses two external trigger connectors. A pulse on the first trigger connector (TRIG1) generates the first output pulse after a short fixed propagation delay and a variable delay (PROP1 + DLY1), with amplitude AMP1 and pulse width PW1. A pulse on the second trigger connector (TRIG2) generates the second output pulse after a short fixed propagation delay and a variable delay (PROP2 + DLY2), with amplitude AMP2 and pulse width PW2. As with the other modes, both output pulses appear on the same output connector. The user must ensure that the delay between the first output pulse and the second pulse is between 150 ns to 1s (and less than 50% of the period). The timing between the two pulses within the doublet is controlled DLY1 and DLY2 settings and the timing between the trigger pulses.

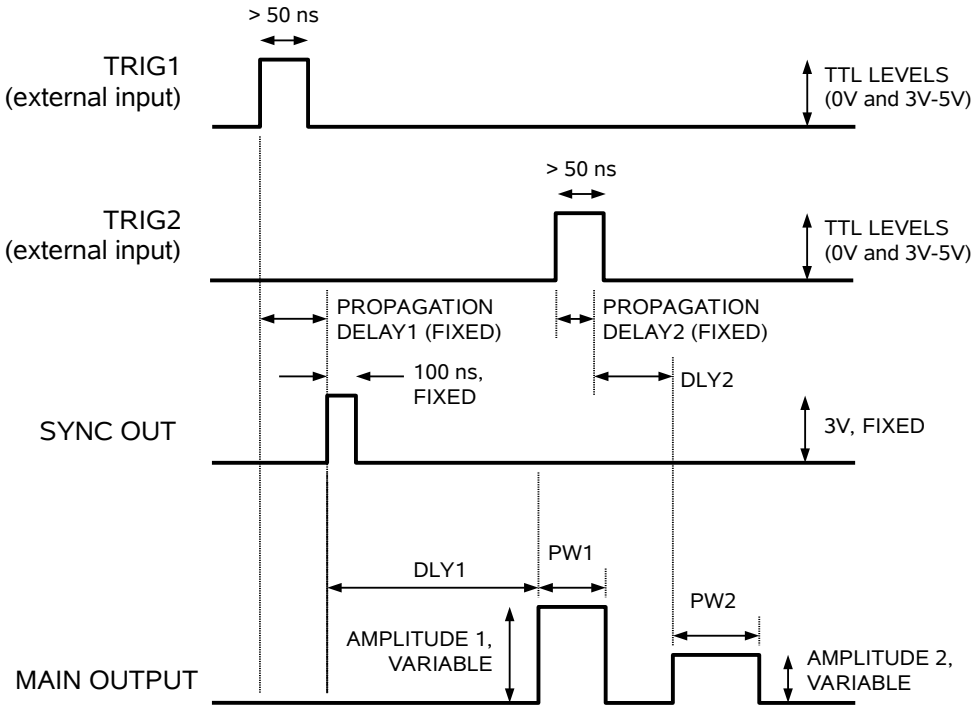

POLARITY CONTROL

The polarity of both output pulses in the doublet is controlled by the polarity of AMPLITUDE 1 setting, which may be positive or negative on units with the -PN option. (The polarity of the AMPLITUDE 2 setting is ignored by the internal circuitry.)

TRIGGER MODES

This instrument has five trigger modes:

- Internal Trigger: the instrument controls the trigger frequency, and generates the clock internally.
- Single External Trigger: the instrument is triggered by an external TTL-level clock on the back-panel TRIG1 connector, as described above.
- Double External Trigger: the instrument is triggered by external TTL-level clocks on the back-panel TRIG1 and TRIG2 connectors, as described above.
- Manual Trigger: the instrument is triggered by the front-panel “SINGLE PULSE” pushbutton.
- Hold Trigger: the instrument is set to not trigger at all.

These modes can be selected using the front panel trigger menu, or by using the appropriate programming commands. (See the “Programming Manual for -B Instruments” for more details.)

WARNING: The output stage may be damaged if triggered by an external signal at a pulse repetition frequency greater than 1 kHz.

GATING MODES

Triggering can be suppressed by a TTL-level signal on the rear-panel GATE connector. The instrument can be set to stop triggering when this input high or low, using the front-panel gate menu or the appropriate programming commands.

PROTECTING YOUR INSTRUMENT

TURN OFF INSTRUMENT WHEN NOT IN USE

The lifetime of the switching elements in the pulse generator module is proportional to the running time of the instrument. For this reason the prime power to the instrument should be turned off when the instrument is not in use. In the case of failure, the switching elements are easily replaced following the procedure described in a following section.

DO NOT EXCEED 1 kHz

The output stage may be damaged if triggered by an external signal at a pulse repetition frequency greater than 1 kHz.

USE A 50Ω LOAD

A 50 Ohm load is *required* for proper operation. The output stage may be damaged if the output is not terminated into a 50Ω load.

OPERATIONAL CHECK

This section describes a sequence to confirm the basic operation of the instrument. It should be performed after receiving the instrument. It is a useful learning exercise as well.

Before proceeding with this procedure, finish reading this instruction manual thoroughly. Then read the “Local Control” section of the “Programming Manual for -B Instruments” thoroughly. The “Local Control” section describes the front panel controls used in this operational check - in particular, the MOVE, CHANGE, and ADJUST controls.

A 50 Ohm load is *required* for proper operation. The output stage may be damaged if the output is not terminated into a 50Ω load.

The AVRK-4-B-DPF output may be observed using either a high-speed sampling oscilloscope, or a slower real-time oscilloscope. To accurately observe these rising and falling edges, a sampling oscilloscope with a bandwidth of 1 GHz is required. However, if the rising and falling edges do not need to be accurately observed, it may be more convenient to use a real-time oscilloscope. The two basic test arrangements are outlined in the figures below:

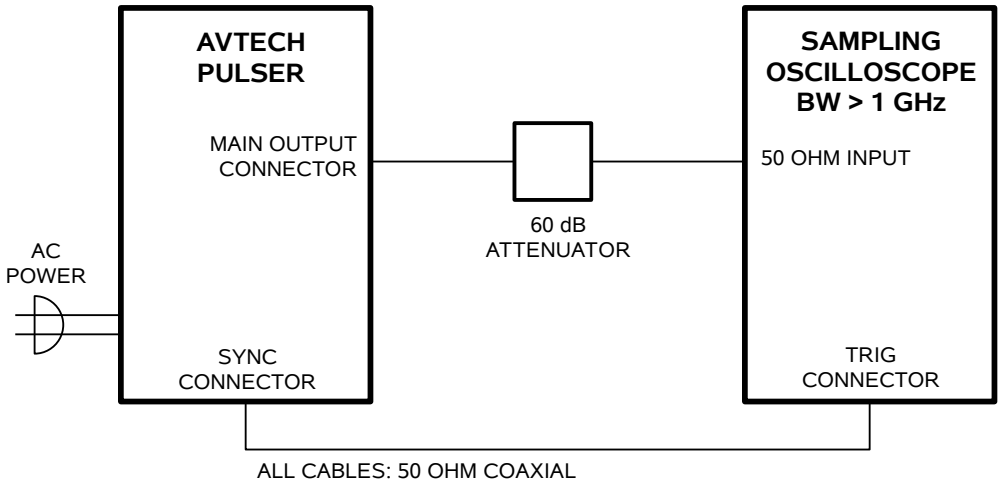

BASIC TEST ARRANGEMENT, WITH A SAMPLING OSCILLOSCOPE

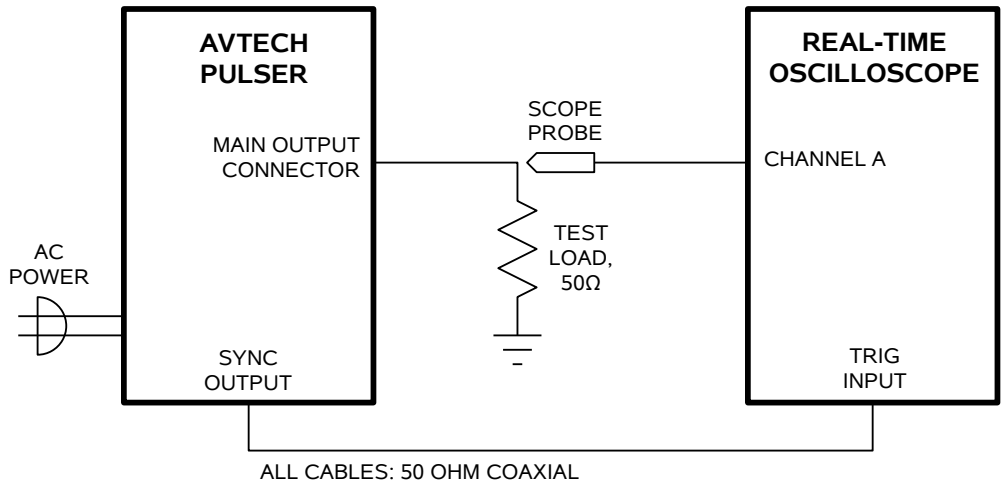

BASIC TEST ARRANGEMENT, WITH A REAL-TIME OSCILLOSCOPE

1. Connect the pulse generator to an oscilloscope using one of the two methods shown above. Note that:

   a) The use of 60 dB attenuator at the sampling scope vertical input channel will ensure a peak input signal to the sampling scope of less than 1 Volt. WARNING: This model may provide a peak output power in excess of 12 kW. The peak power rating of the attenuator must exceed this limit. Factory tests are conducted using a Pasternack PE7385-20 attenuator to provide the high-power attenuation.

   b) If using a realtime oscilloscope, a 50 Ohm load must be used to terminate the output.

   c) The SYNC output channel provides TTL level signals (approximately 0 and +3V). To avoid overdriving the TRIG input channel of some sampling oscilloscopes, a 20 dB attenuator should be placed at the input to the scope trigger channel.

   d) The bandwidth capability of components and instruments used to display the pulse generator output signal (attenuators, cables, connectors, etc.) should exceed 1 GHz.

   e) Set the oscilloscope to trigger externally with the vertical setting at 100 mV/div for sampling oscilloscopes, or 100 V/div for real-time scopes, and the horizontal setting at 20 ns/div.

2. Turn on the AVRK-4-B-DPF. The main menu will appear on the LCD.

3. To set the AVRK-4-B-DPF to trigger from the internal clock at a PRF of 1 kHz:

    a) The arrow pointer should be pointing at the frequency menu item. If it is not, press the MOVE button until it is.

    b) Press the CHANGE button. The frequency submenu will appear. Rotate the ADJUST knob until the frequency is set at 1 kHz.

    c) The arrow pointer should be pointing at the “Internal” choice. If it is not, press MOVE until it is.

    d) Press CHANGE to return to the main menu.

4. To set the delay to 100 ns:

    a) Press the MOVE button until the arrow pointer is pointing at the DLY1 menu item.

    b) Press the CHANGE button. The delay submenu will appear. Rotate the ADJUST knob until the delay is set at 100 ns.

    c) The arrow pointer should be pointing at the “Normal” choice. If it is not, press MOVE until it is.

    d) Press CHANGE to return to the main menu.

5. To set the pulse width to 20 ns:

    a) Press the MOVE button until the arrow pointer is pointing at the PW1 menu item.

    b) Press the CHANGE button. The pulse width submenu will appear. Rotate the ADJUST knob until the pulse width is set at 20 ns.

    c) The arrow pointer should be pointing at the “Normal” choice. If it is not, press MOVE until it is.

    d) Press CHANGE to return to the main menu.

6. At this point, nothing should appear on the oscilloscope.

7. To enable the output:

    a) Press the MOVE button until the arrow pointer is pointing at the output menu item.

    b) Press the CHANGE button. The output submenu will appear.

c) Press MOVE until the arrow pointer is pointing at the “ON” choice.

d) Press CHANGE to return to the main menu.

8. To change the output amplitude:

   a) Press the MOVE button until the arrow pointer is pointing at the AMP1 menu item.

   b) Press the CHANGE button. The amplitude submenu will appear. Rotate the ADJUST knob until the amplitude is set at +500V.

   c) Observe the oscilloscope. You should see 20 ns wide, 500V pulses. If you do not, you may need to adjust the delay setting to a value more compatible with your sampling oscilloscope. Repeat step 4 if required. You may also need to adjust the sampling scope controls.

   d) Rotate the ADJUST knob. The amplitude as seen on the oscilloscope should vary. Return it to 500V.

   e) Press CHANGE to return to the main menu.

9. Try varying the pulse width, by repeating step (5). As you rotate the ADJUST knob, the pulse width on the oscilloscope will change. It should agree with the displayed value.

This completes the operational check.

PROGRAMMING YOUR PULSE GENERATOR

KEY PROGRAMMING COMMANDS

The “Programming Manual for -B Instruments” describes in detail how to connect the pulse generator to your computer, and the programming commands themselves. A large number of commands are available; however, normally you will only need a few of these. Here is a basic sample sequence of commands that might be sent to the instrument after power-up:

*rst	(resets the instrument)
trigger:source internal	(selects internal triggering)
frequency 1000 Hz	(sets the frequency to 1000 Hz)
pulse:width1 5 ns	(sets the pulse width of the leading pulse to 5 ns)
pulse:width2 10 ns	(sets the pulse width of the trailing pulse to 10 ns)
pulse:delay1 50 ns	(sets the delay of the leading pulse to 50 ns)
pulse:delay2 500 ns	(sets the delay of the trailing pulse to 500 ns)
volt:ampl1 -50	(sets the amplitude of the leading pulse to -50 V)
volt:ampl2 -100	(sets the amplitude of the leading pulse to -100 V)
output on	(turns on the output)

For triggering a single event, this sequence would be more appropriate:

*rst	(resets the instrument)
trigger:source hold	(turns off all triggering)
pulse:width1 5 ns	(sets the pulse width of the leading pulse to 5 ns)
pulse:width2 10 ns	(sets the pulse width of the trailing pulse to 10 ns)
pulse:delay1 50 ns	(sets the delay of the leading pulse to 50 ns)
pulse:delay2 500 ns	(sets the delay of the trailing pulse to 500 ns)
output on	(turns on the output)
volt:ampl1 50	(sets the amplitude of the leading pulse to +50 V)
volt:ampl2 100	(sets the amplitude of the leading pulse to +100 V)
trigger:source immediate	(generates a single non-repetitive trigger event)
trigger:source hold	(turns off all triggering)
output off	(turns off the output)

To set the instrument to trigger from an external TTL signal applied to the rear-panel TRIG1 connector, use:

*rst	(resets the instrument)
trigger:source external	(selects single external mode triggering)
pulse:width1 5 ns	(sets the pulse width of the leading pulse to 5 ns)
pulse:width2 10 ns	(sets the pulse width of the trailing pulse to 10 ns)
pulse:delay1 50 ns	(sets the delay of the leading pulse to 50 ns)
pulse:delay2 500 ns	(sets the delay of the trailing pulse to 500 ns)

volt:ampl1 50 (sets the amplitude of the leading pulse to +50 V)
volt:ampl2 100 (sets the amplitude of the leading pulse to +100 V)
output on (turns on the output)

To select the double external trigger mode (TRIG1 and TRIG2) instead, use:

trigger:source extdbl (selects double external mode triggering)

These commands will satisfy 90% of your programming needs.

ALL PROGRAMMING COMMANDS

For more advanced programmers, a complete list of the available commands is given below. These commands are described in detail in the “Programming Manual for -B Instruments”. (Note: this manual also includes some commands that are not implemented in this instrument. They can be ignored.)

Keyword	Parameter	Notes
OUTPut:		
:[STATe]	<boolean value>	
:PROTection		
:TRIPped?		[query only]
[SOURce]:		
:FREQuency		
[:CW | FIXed]	<numeric value>	
[SOURce]:		
:PULSe		
:PERiod	<numeric value>	
:WIDTh	<numeric value>	
:DCYCle	<numeric value>	
:HOLD	WIDTh | DCYCle	
:DELay	<numeric value>	
:GATE		
:TYPE	ASYNC | SYNC	
:LEVel	HIgh | LOw	
[SOURce]:		
:VOLTage		
[:LEVel]		
[:IMMediate]		
[:AMPLitude]	<numeric value> | EXTernal	
:PROTection		
:TRIPped?		[query only]
STATUS:		
:OPERation		
:[EVENt]?		[query only, always returns "0"]
:CONDition?		[query only, always returns "0"]
:ENABle	<numeric value>	[implemented but not useful]
:QUEStionable		
:[EVENt]?		[query only, always returns "0"]

:CONDition?		[query only, always returns "0"]
:ENABle	<numeric value>	[implemented but not useful]
SYSTem:		
:COMMunicate		
:GPIB		
:ADDRess	<numeric value>	
:SERial		
:CONTrol		
:RTS	ON | IBFull | RFR	
:[RECeive]		
:BAUD	1200 | 2400 | 4800 | 9600 | 19200 | 38400 | 57600 | 115200	
:ERRor		
:[NEXT]?		[query only]
:COUNT?		[query only]
:VERSion?		[query only]
TRIGger:		
:SOURce	INTernal | EXTernal | EXTDBL | MANual | HOLD | IMMediate	
*CLS		[no query form]
*ESE	<numeric value>	
*ESR?		[query only]
*IDN?		[query only]
*OPC		
*SAV	0 | 1 | 2 | 3	[no query form]
*RCL	0 | 1 | 2 | 3	[no query form]
*RST		[no query form]
*SRE	<numeric value>	
*STB?		[query only]
*TST?		[query only]
*WAI		[no query form]

MECHANICAL INFORMATION

TOP COVER REMOVAL

If necessary, the interior of the instrument may be accessed by removing the four Phillips screws on the top panel. With the four screws removed, the top cover may be slid back (and off).

⚠ Always disconnect the power cord and allow the instrument to sit unpowered for 10 minutes before opening the instrument. This will allow any internal stored charge to discharge.

There are no user-adjustable internal circuits. For repairs other than fuse replacement, please contact Avtech (info@avtechpulse.com) to arrange for the instrument to be returned to the factory for repair. Service is to be performed solely by qualified service personnel.

⚠ Caution: High voltages are present inside the instrument during normal operation. Do not operate the instrument with the cover removed.

RACK MOUNTING

A rack mounting kit is available. The -R5 rack mount kit may be installed after first removing the one Phillips screw on the side panel adjacent to the front handle.

ELECTROMAGNETIC INTERFERENCE

To prevent electromagnetic interference with other equipment, all used outputs should be connected to shielded loads using shielded coaxial cables. Unused outputs should be terminated with shielded coaxial terminators or with shielded coaxial dust caps, to prevent unintentional electromagnetic radiation. All cords and cables should be less than 3m in length.

MAINTENANCE

REGULAR MAINTENANCE

This instrument does not require any regular maintenance.

On occasion, one or more of the four rear-panel fuses may require replacement. All fuses can be accessed from the rear panel. See the “FUSES” section for details.

CLEANING

If desired, the interior of the instrument may be cleaned using compressed air to dislodge any accumulated dust. (See the “TOP COVER REMOVAL” section for instructions on accessing the interior.) No other cleaning is recommended.

TRIGGER DAMAGE

The rear-panel TRIG input, used in the external trigger mode, is protected by a diode clamping circuit. However, the protection circuit is not foolproof, and it is possible for a grossly excessive signal to damage the trigger circuitry on the main timing control board (the 4×10 inch board on the right side of the instrument).

The IC that is most likely to fail under these conditions is installed in a socket. It is a standard TTL IC in a 16-pin plastic DIP package, model 74F151 or equivalent.

If you suspect that this IC has been damaged, turn off the power and replace this IC. It may be replaced by a 74F151, 74LS151, 74ALS151, or 74HCT151.

WIRING DIAGRAMS

WIRING OF AC POWER

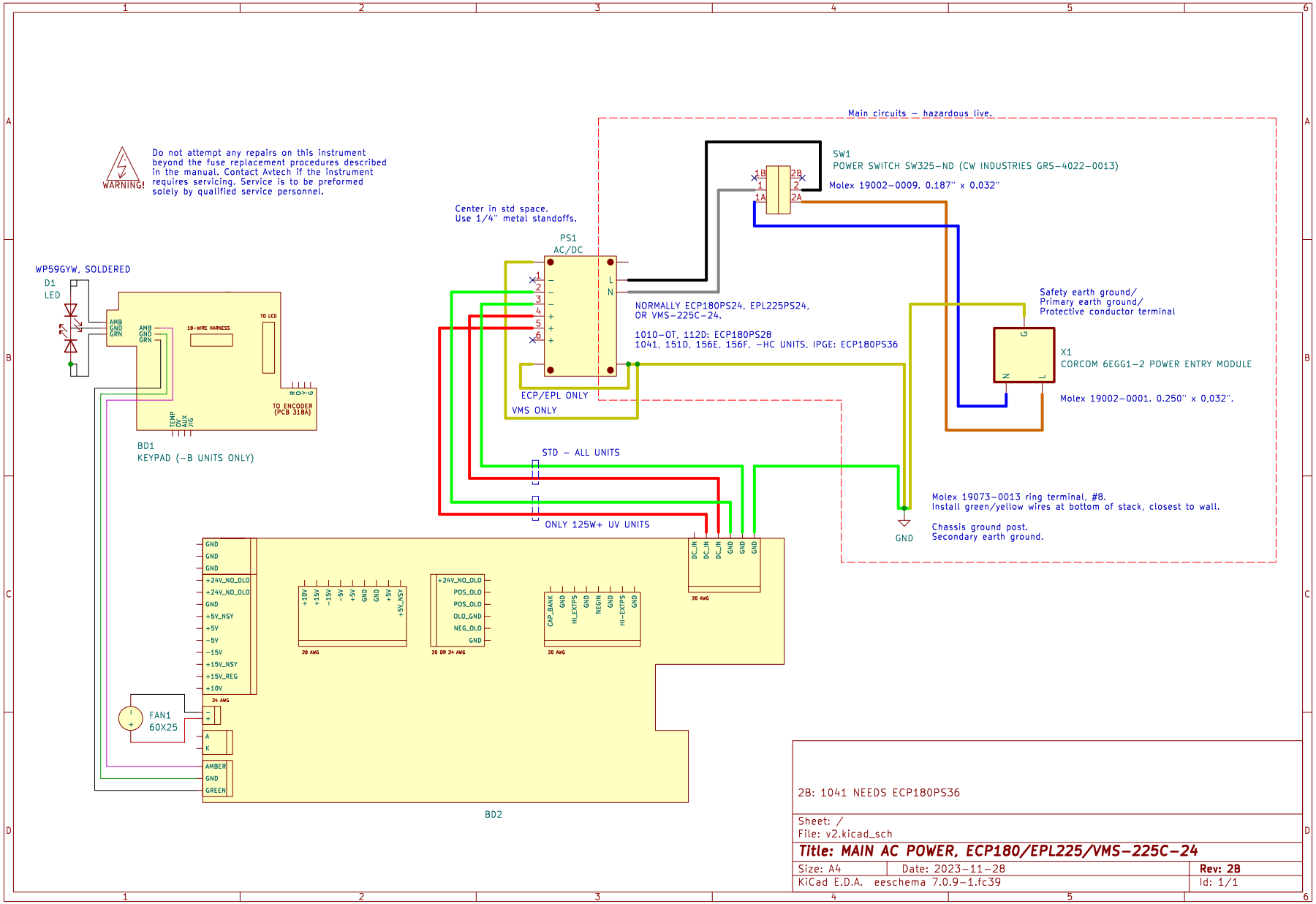

WIRING OF DC POWER

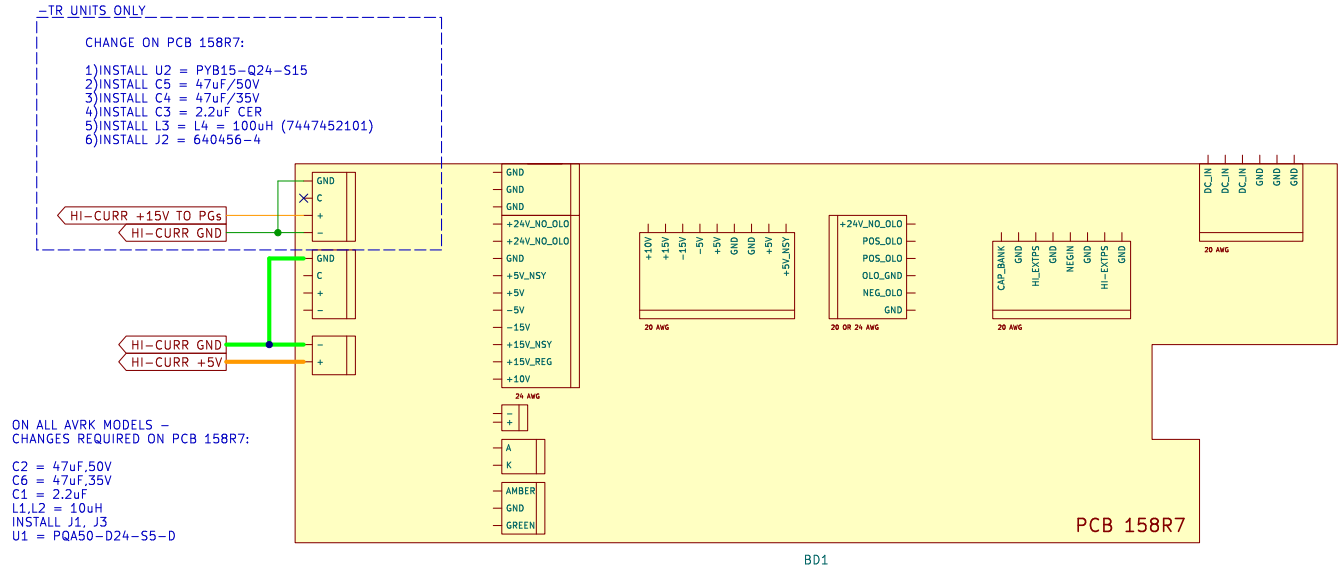

ON ALL AVRK MODELS -
CHANGES REQUIRED ON PCB 158R7:

C2 = 47uF,50V
C6 = 47uF,35V
C1 = 2.2uF
L1,L2 = 10uH
INSTALL J1, J3
U1 = PQA50-D24-S5-D

3A: TO 158R5R7. DESIGNATORS UPDATED.
2B: TO 158R5R6.

Sheet: /
File: AVRK PS v3.kicad_sch

Title: HIGH-CURRENT PS FOR AVRK, INCLUDING -TR, -DPF

Size: A4	Date: 2022-06-29	Rev: 3A
KiCad E.D.A. eeschema 7.0.5-1.fc38		Id: 1/1

PCB 158R7 - LOW VOLTAGE POWER SUPPLY

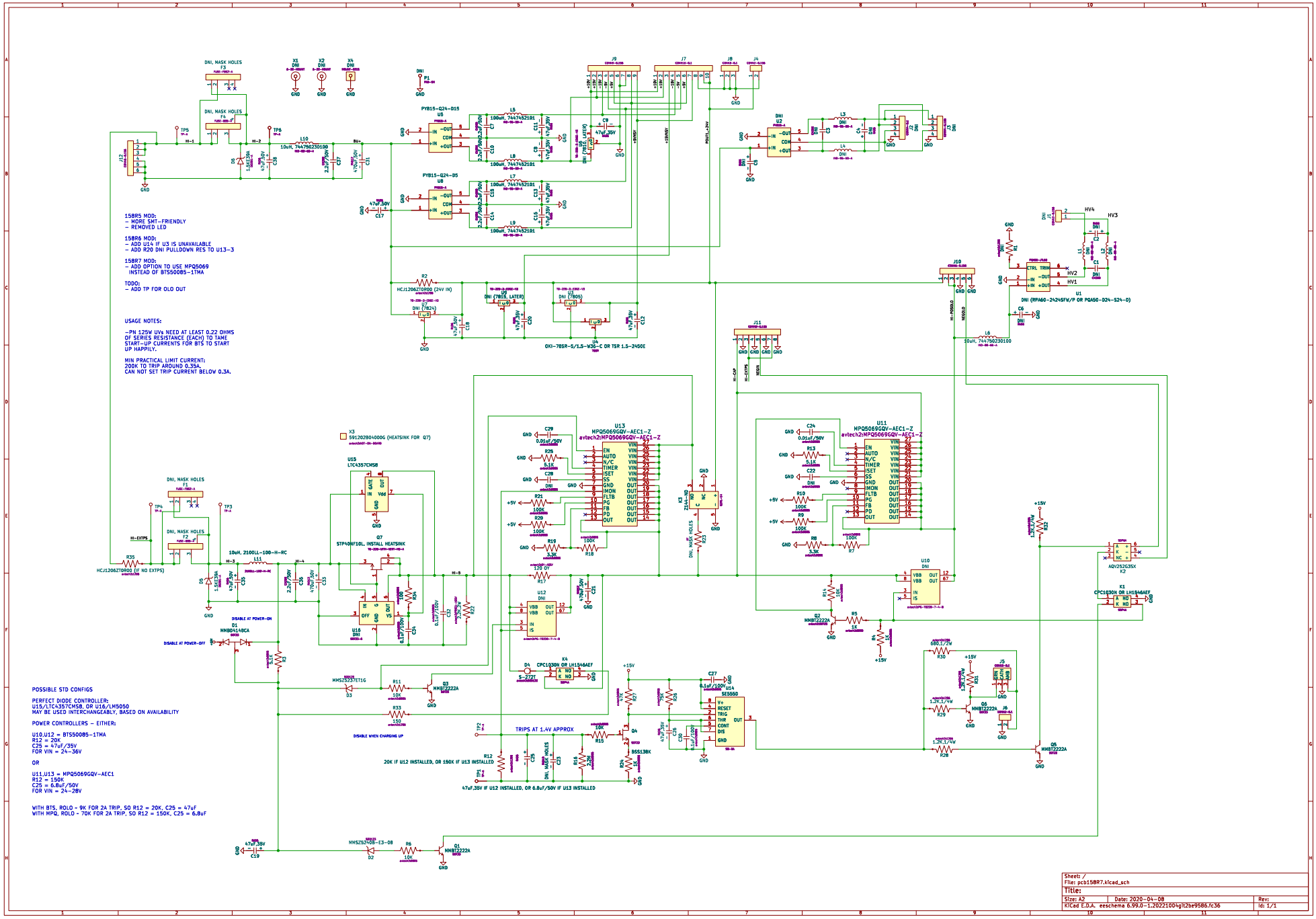

PCB 282C - HIGH VOLTAGE DC POWER SUPPLY

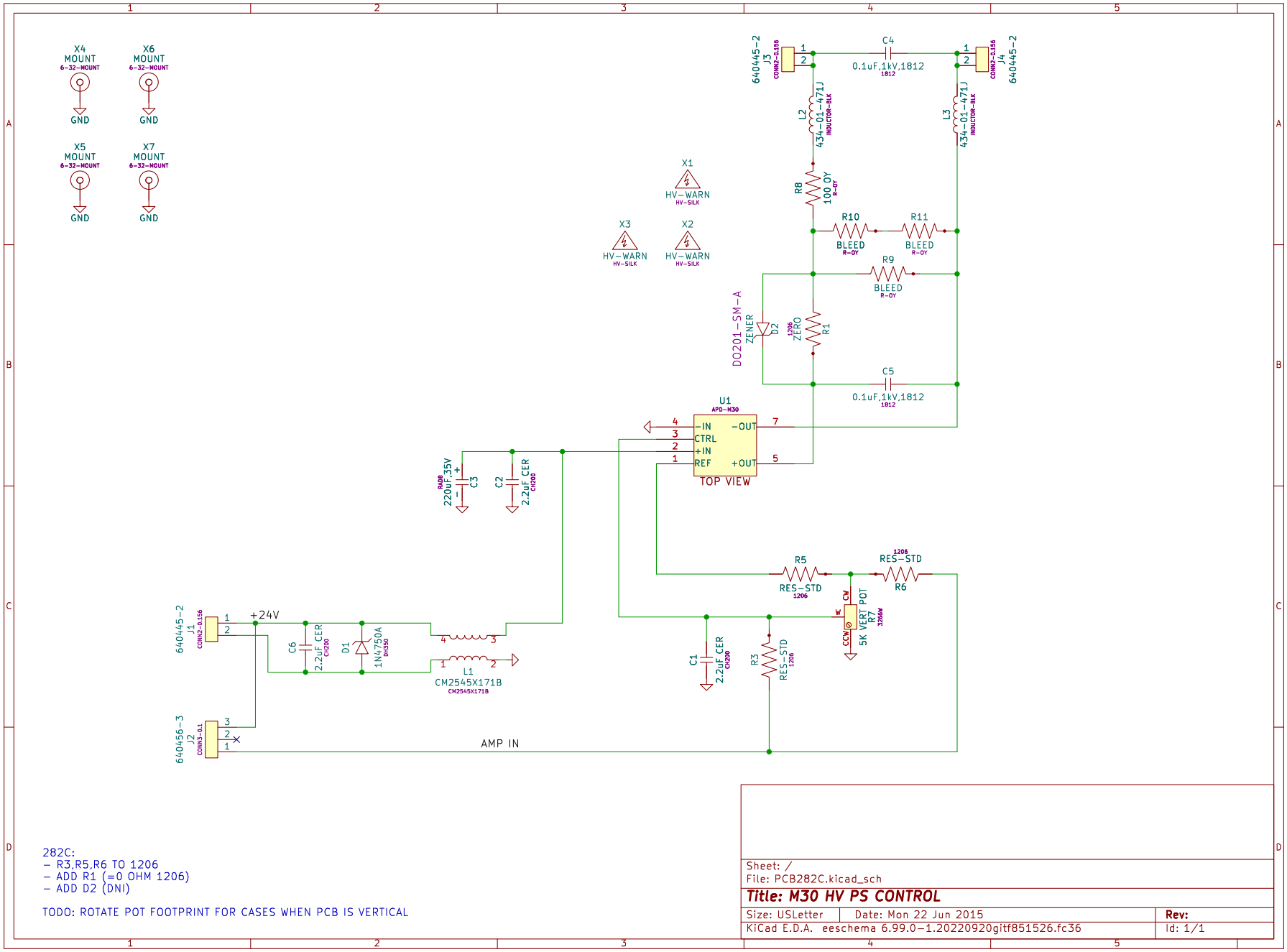

282C:
- R3,R5,R6 TO 1206
- ADD R1 (=0 OHM 1206)
- ADD D2 (DNI)

TODO: ROTATE POT FOOTPRINT FOR CASES WHEN PCB IS VERTICAL

Sheet: /
File: PCB282C.kicad_sch

Title: M30 HV PS CONTROL

Size: USLetter	Date: Mon 22 Jun 2015	Rev:
KiCad E.D.A. eeschema 6.99.0-1.20220920gitf851526.fc36		Id: 1/1

PCB 341A – INTERLOCK (-SIL UNITS)

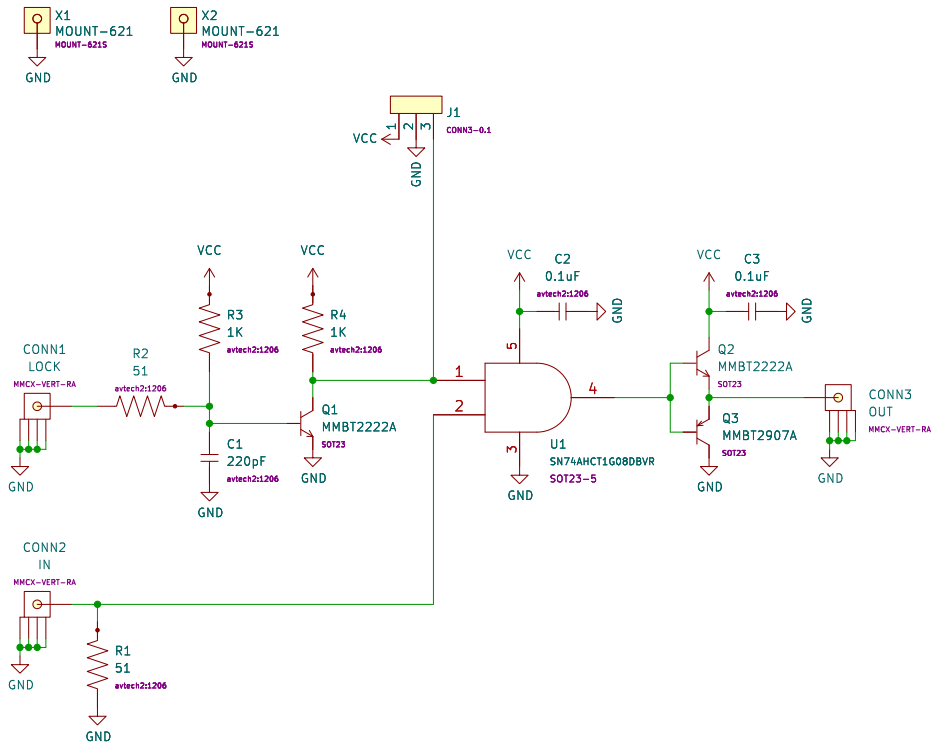

Sheet: /
File: pcb341A.kicad_sch

Title: SIMPLE INTERLOCK

Size: A4	Date: 2021-10-20	Rev:
KiCad E.D.A. eeschema 6.99.0-1.20220920gitf851526.fc36		Id: 1/1

PCB 216F - PRF/PW TWEAKING PCB

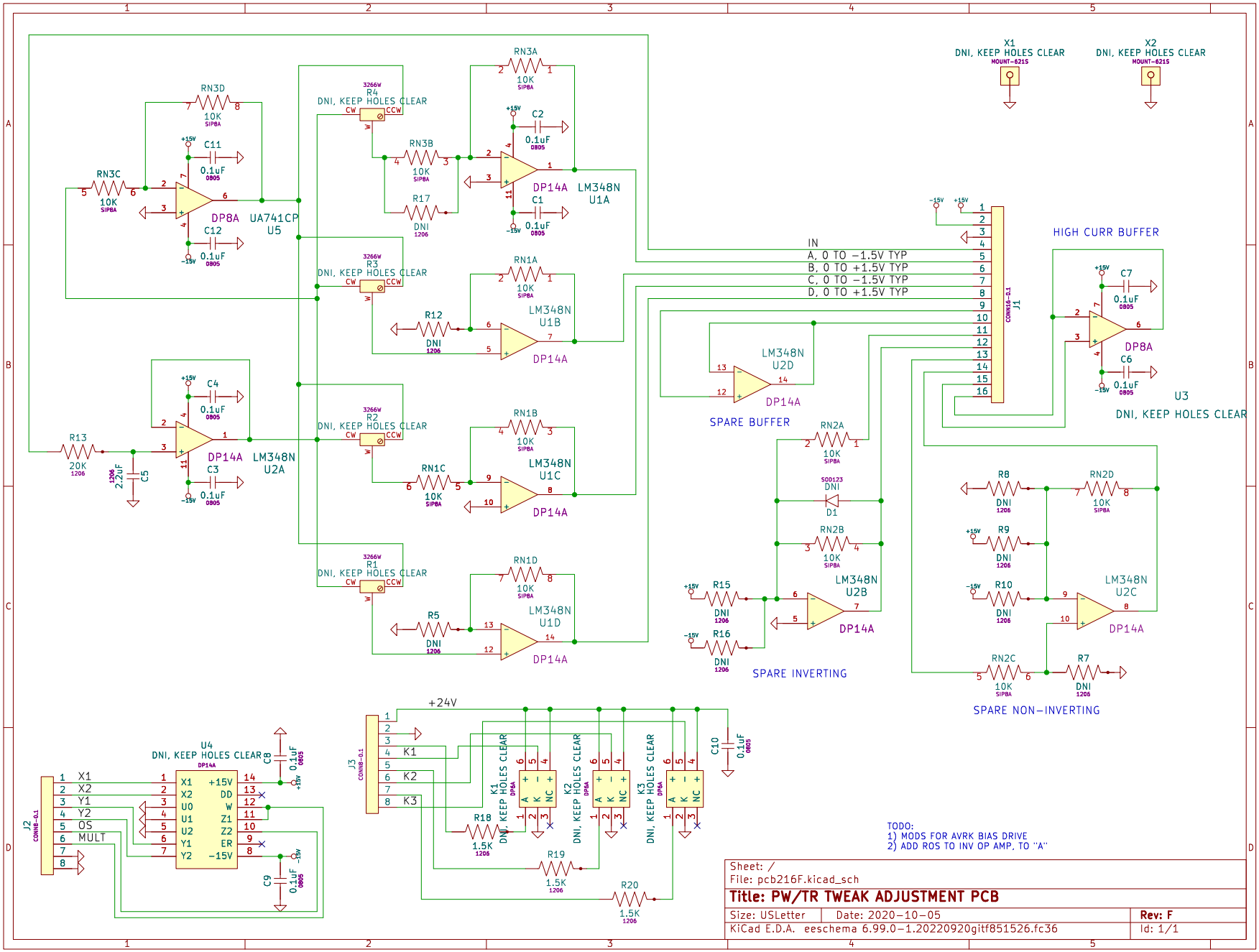

PCB 241F - SUPPLEMENTARY PULSE WIDTH CONTROL

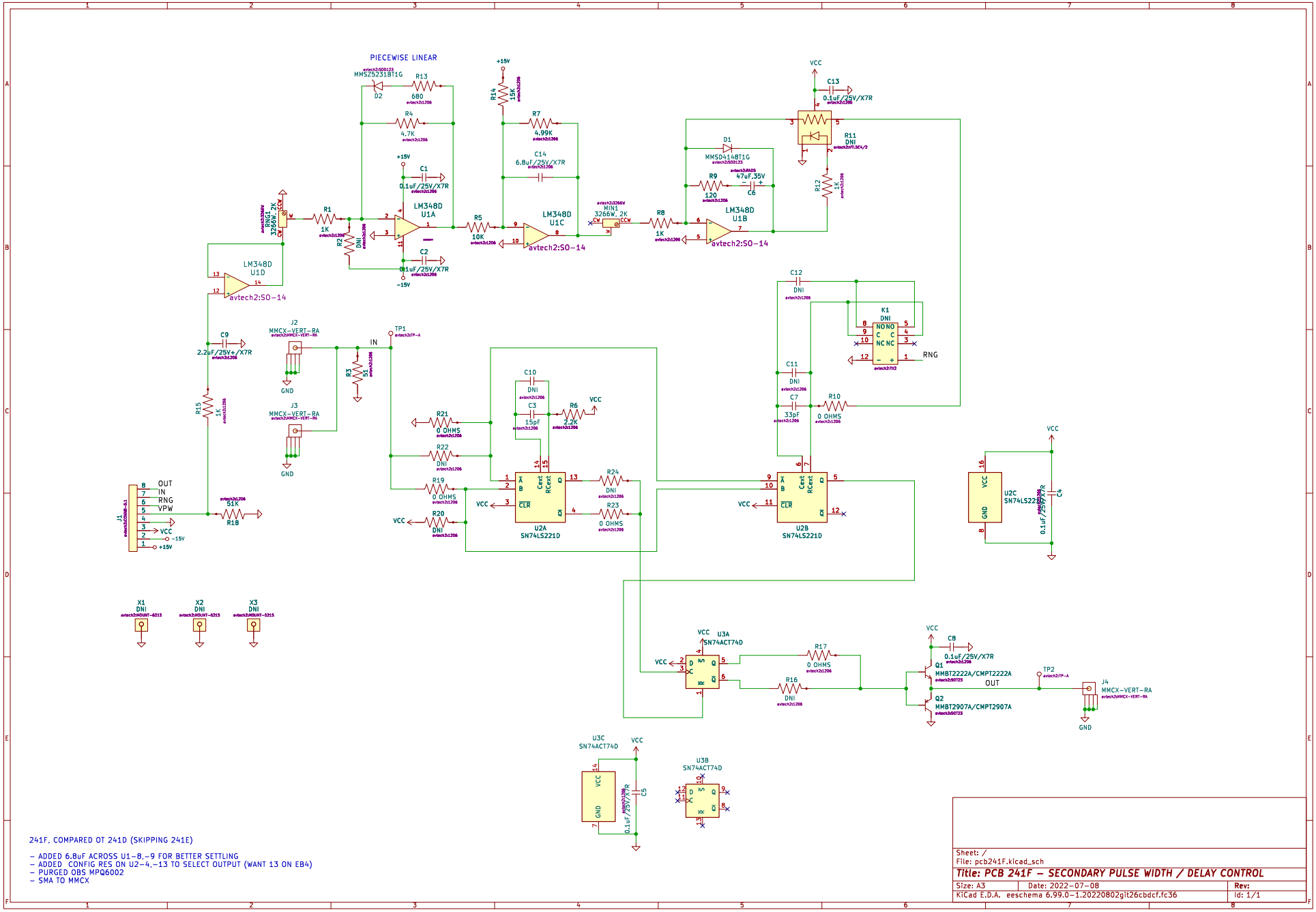

241F, COMPARED OT 241D (SKIPPING 241E)

- ADDED 6.8uF ACROSS U1-8,-9 FOR BETTER SETTLING
- ADDED CONFIG RES ON U2-4,-13 TO SELECT OUTPUT (WANT 13 ON EB4)
- PURGED OBS MPQ6002
- SMA TO MMCX

Sheet: /	
File: pcb241F.kicad_sch	
Title: PCB 241F - SECONDARY PULSE WIDTH / DELAY CONTROL	
Size: A3	Date: 2022-07-08
KiCad E.D.A. eeschema 6.99.0-1.20220802git26cbdcf.fc36	Rev:
	Id: 1/1

PCB 205B - SECOND TIMING CHANNEL

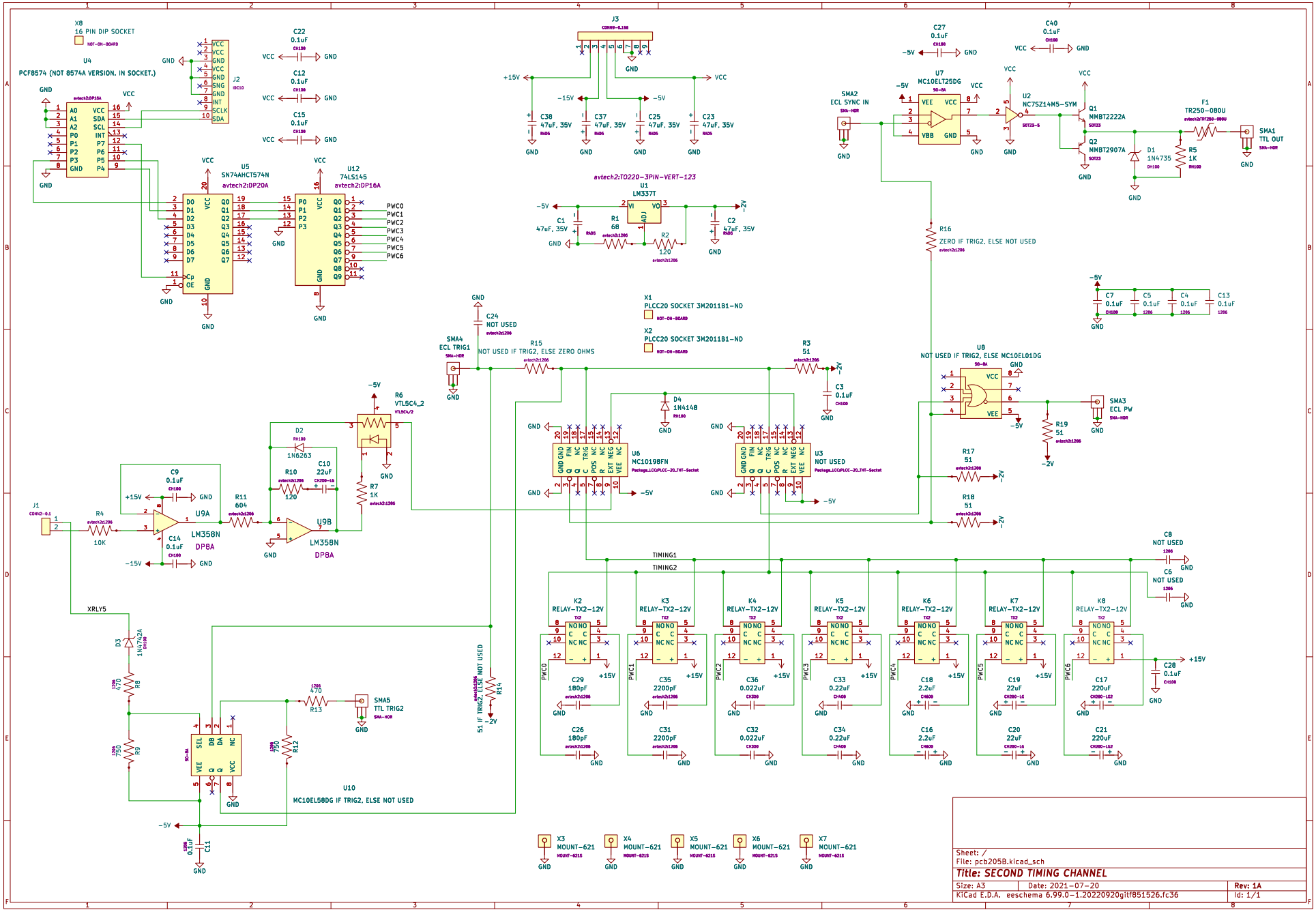

Sheet: /
File: pcb205B.kicad_sch

Title: SECOND TIMING CHANNEL

Size: A3	Date: 2021-07-20	Rev: 1A
KiCad E.D.A. eeschema 6.99.0-1.20220920gitf851526.fc36		Id: 1/1

PCB 317A - AMPL/PW BIAS

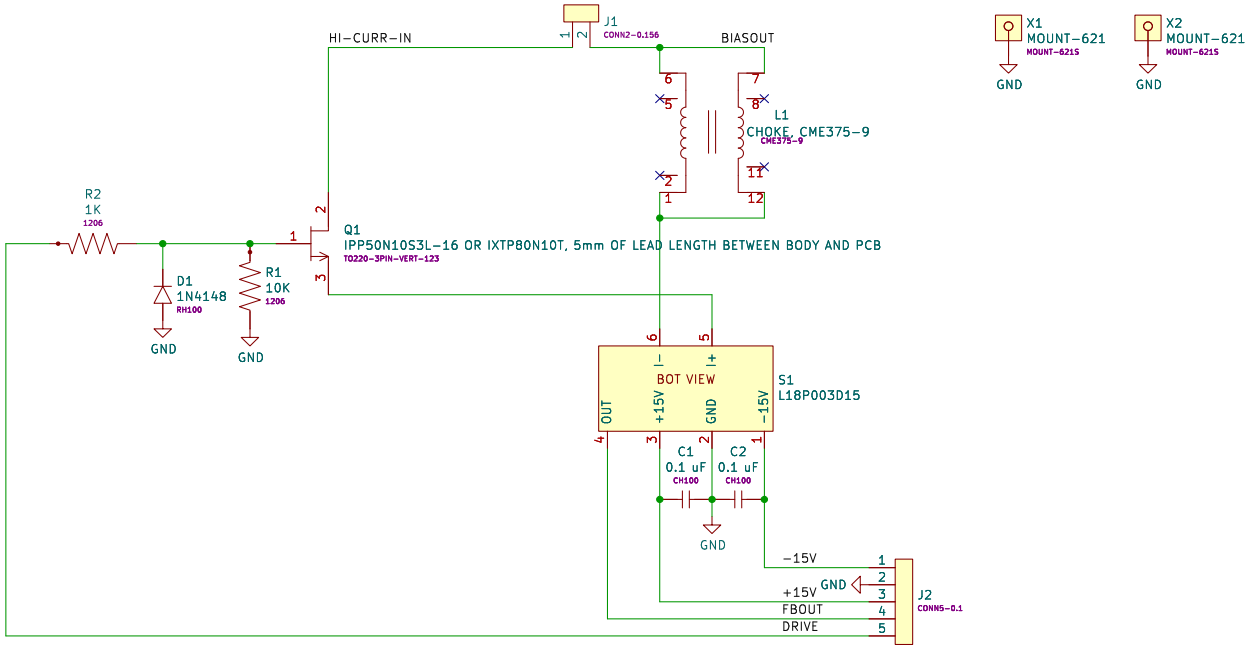

CORR1: CHANGE GATE DRIVE SCHEME FOR BETTER STABILITY

Sheet: /
File: 317A_CORR1.kicad_sch

Title: PCB 317A, CONSTANT CURRENT BIAS

Size: USLetter	Date: 2019-07-25	Rev:
KiCad E.D.A. eeschema 6.99.0-1.20220920gitf851526.fc36		Id: 1/1

PG-N MODULE, MAIN PULSER CIRCUIT

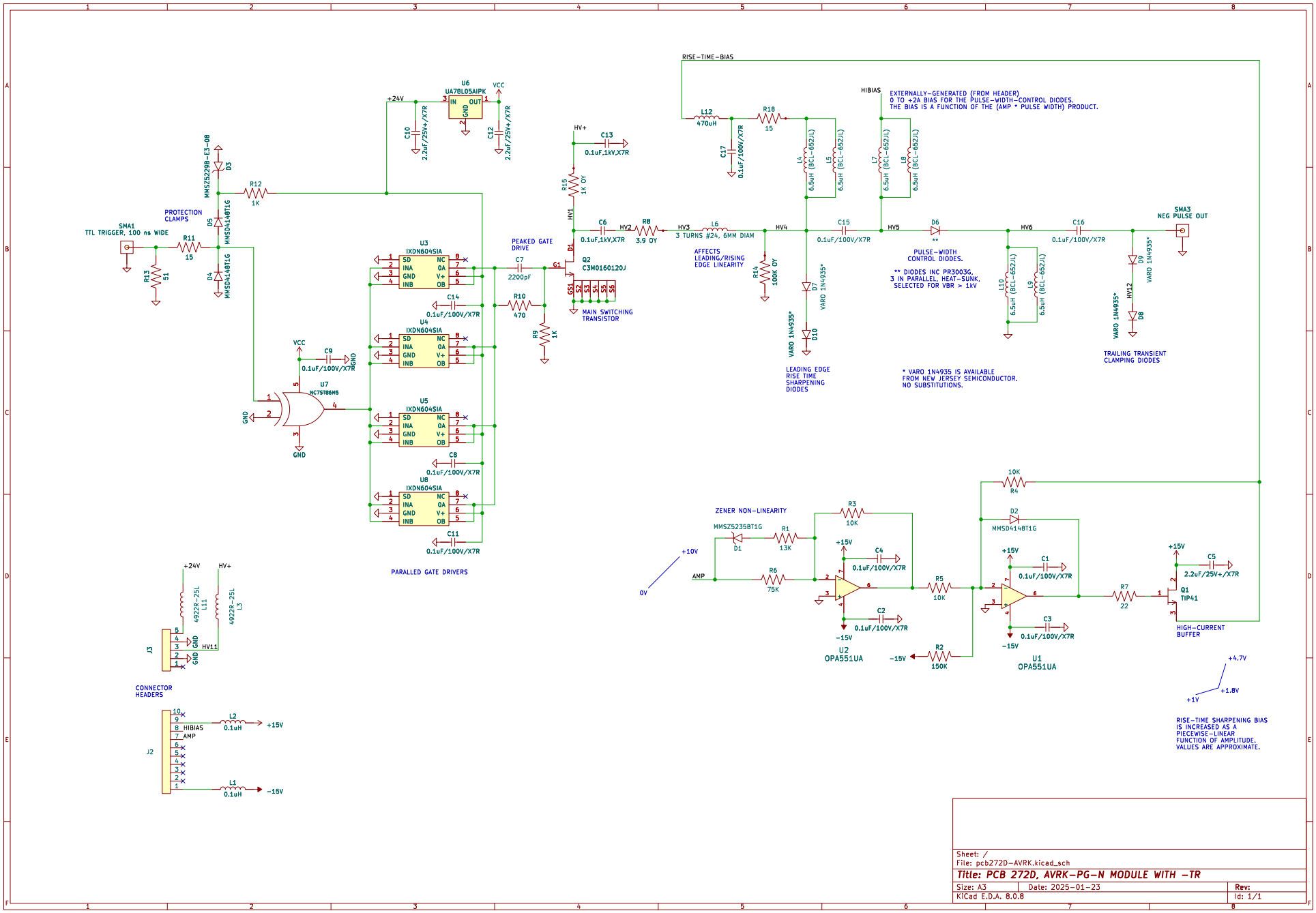

Sheet: /
File: pcb272D-AVRK.kicad_sch

Title: PCB 272D, AVRK-PG-N MODULE WITH -TR

Size: A3	Date: 2025-01-23	Rev:
KiCad E.D.A. 8.0.8		Id: 1/1

AVX-R6 MODULE, POLARITY-INVERTING TRANSFORMER (-P AND -PN UNITS)

RG-174, 10 TURNS, ~12" WOUND ON A
FERROXCUBE / ELNA MAGNETICS
T22/14/6.4-3C81 FERRITE CORE

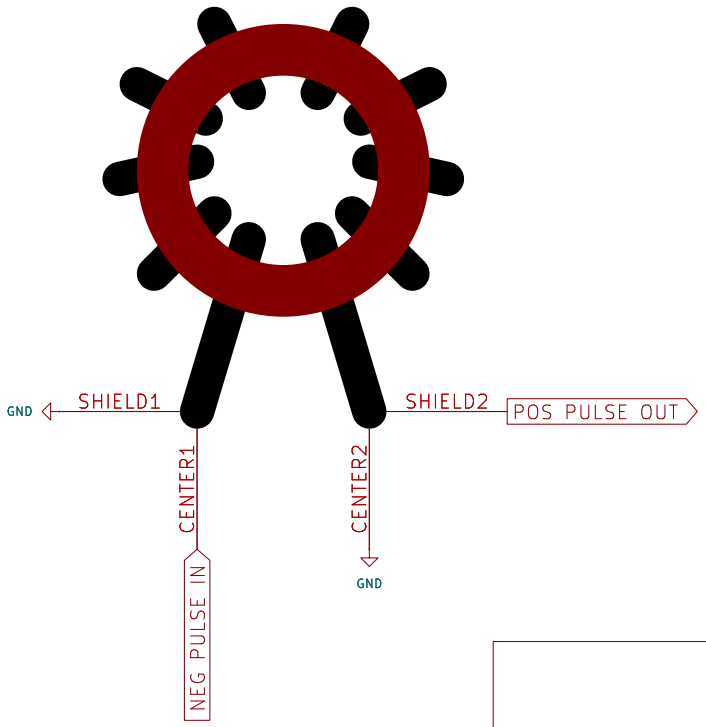

Sheet: /
File: AVX-R6 MANUAL V1.kicad_sch

Title: AVX-R6 COAXIAL PULSE TRANSFORMER DESIGN

Size: A4	Date: 2025-01-24	Rev: 1A
KiCad E.D.A. 8.0.8		Id: 1/1

MON MODULE

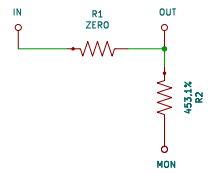

Sheet: /
File: pcb327A-AVRK-MON.kicad_sch

Title: MONITOR EQUIVALENT CIRCUIT FOR AVRK (PCB 327A)

Size: A3	Date: 2025-01-24	Rev:
KiCad E.D.A. 8.0.8		Id: 1/1

PCB 104H - KEYPAD / DISPLAY BOARD

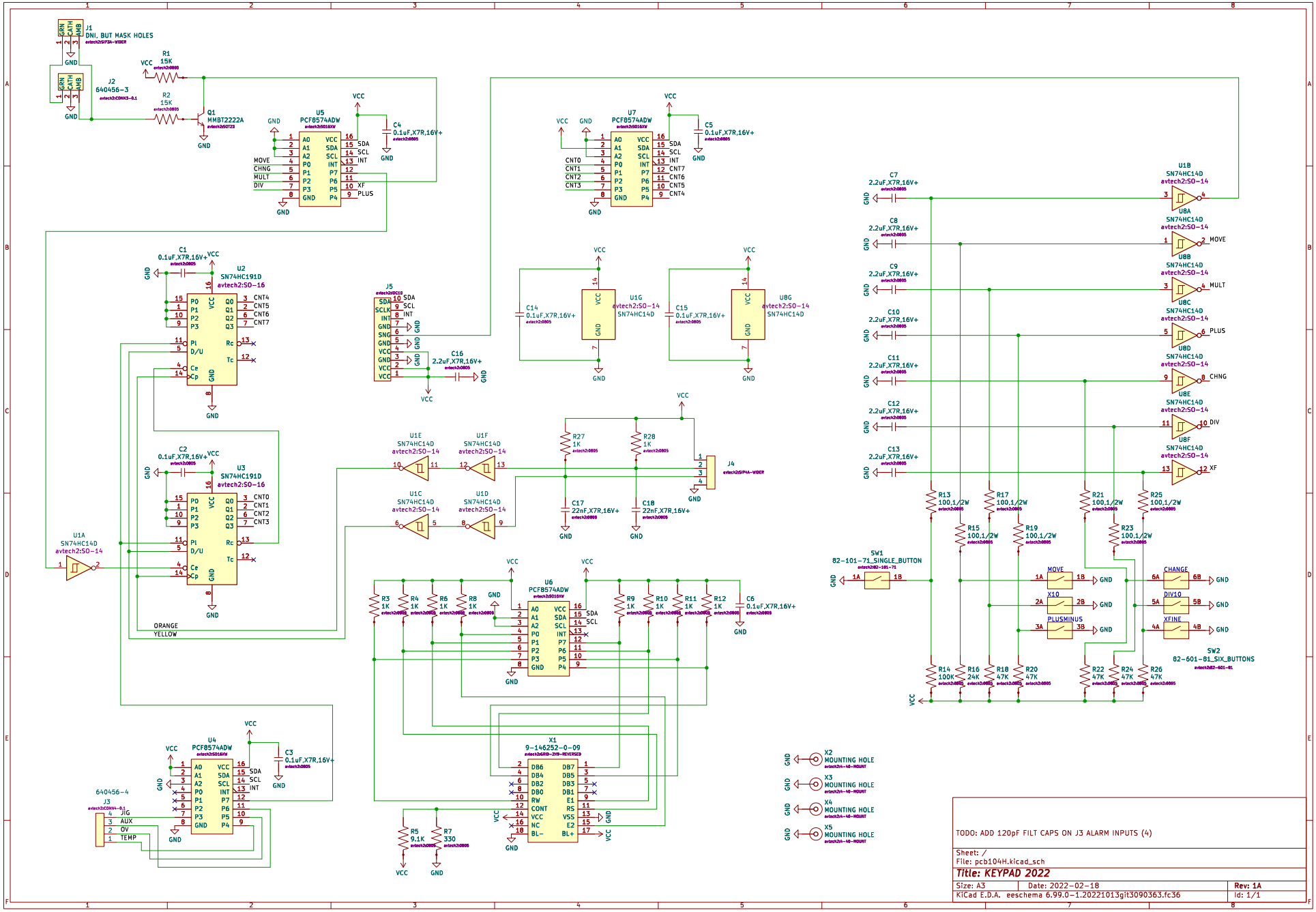

PCB 295G - MAIN CONTROL BOARD, 1 OF 13, TOP-LEVEL

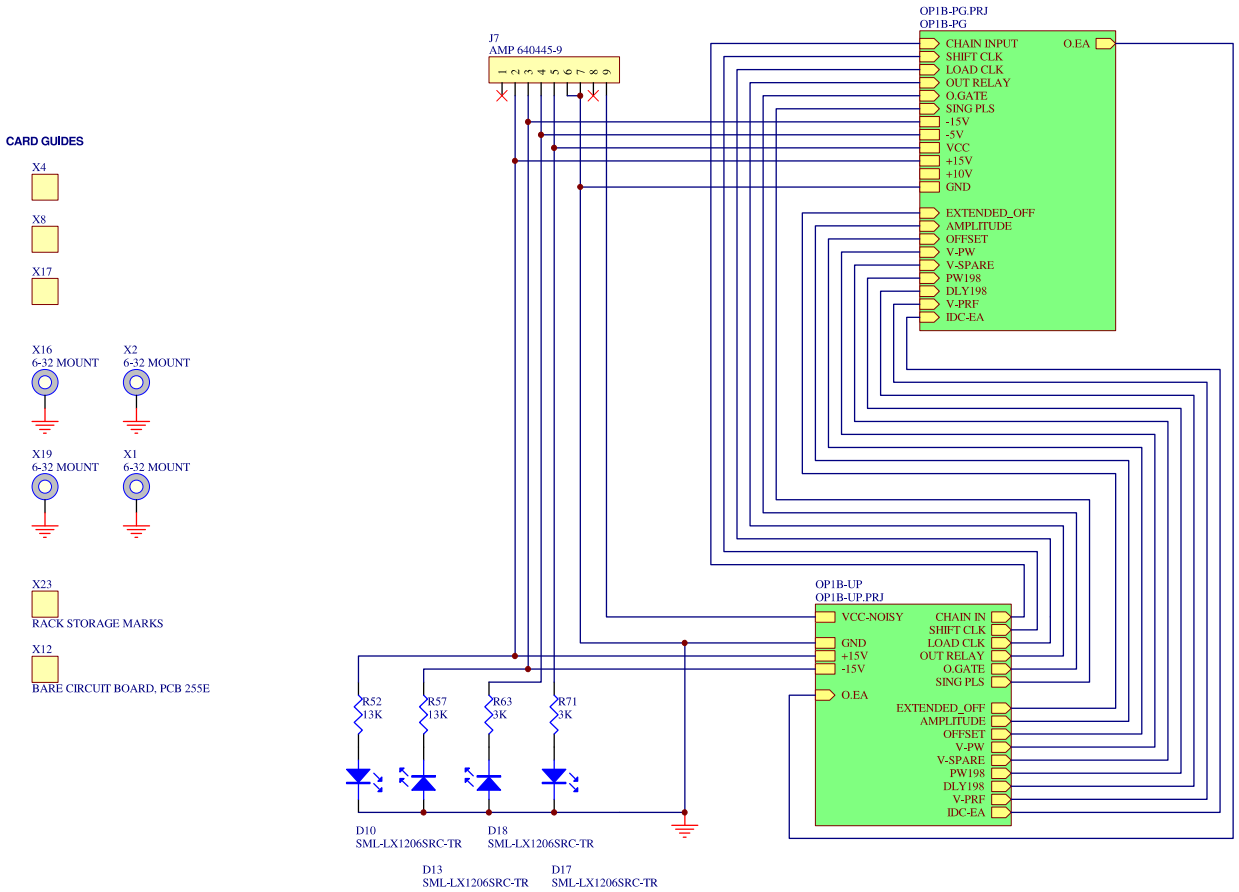

MAIN BOARD TOP-LEVEL SCHEMATIC	
Printed 16-Dec-2024	Revision
Z:\engineering\pcb\295\op1b-2016-pcb295.Ddb - 295G\Mainbrd.prj	

PCB 295G - MAIN CONTROL BOARD, 2 OF 13, MICROCONTROLLER TOP-LEVEL

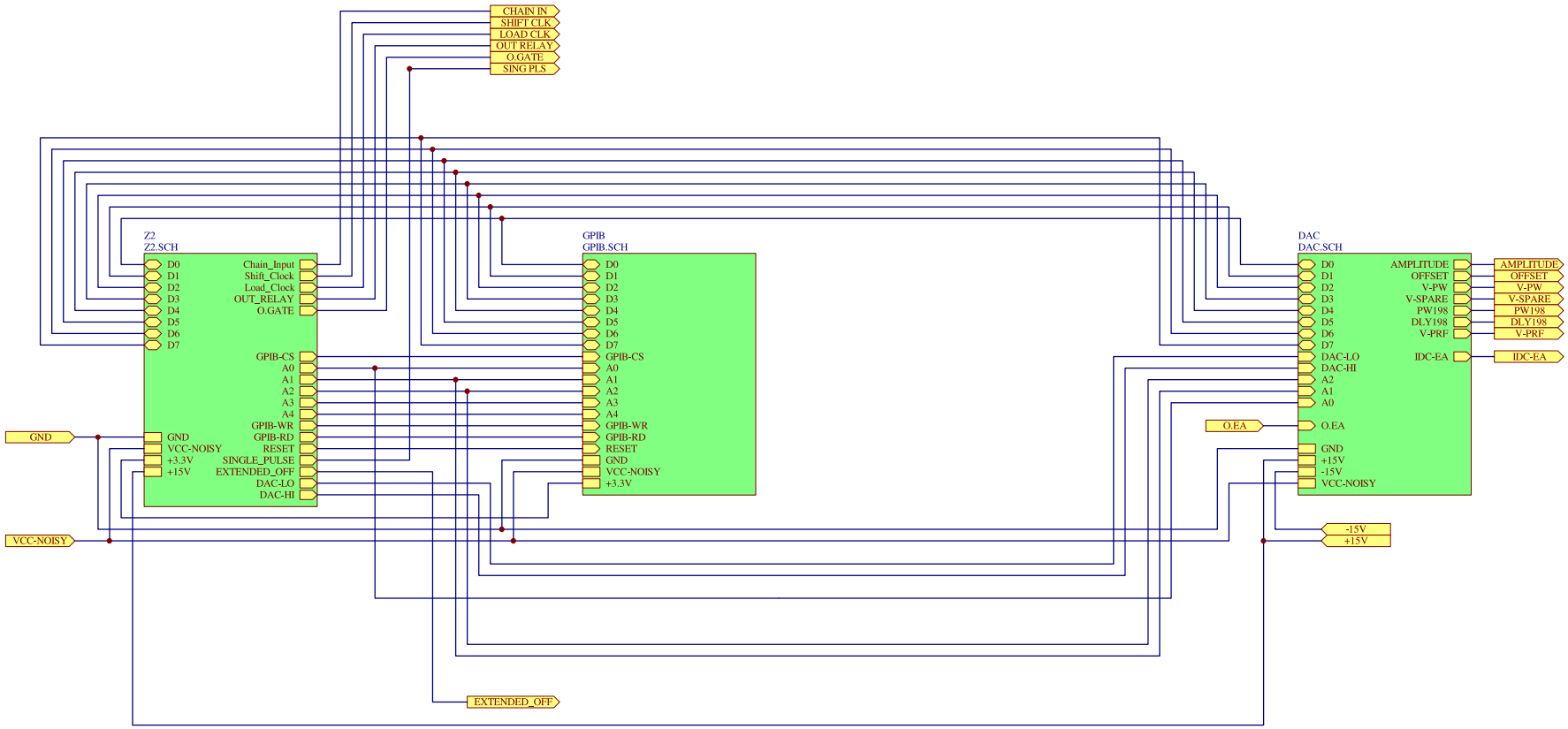

MICROCONTROLLER TOP-LEVEL SCHEMATIC	
Printed 16-Dec-2024	Revision
Z:\engineering\pcb\295\op1b-2016-pcb295.Ddb - 295G\OP1B-UP.PRJ	

PCB 295G - MAIN CONTROL BOARD, 3 OF 13, EMBEDDED CONTROLLER

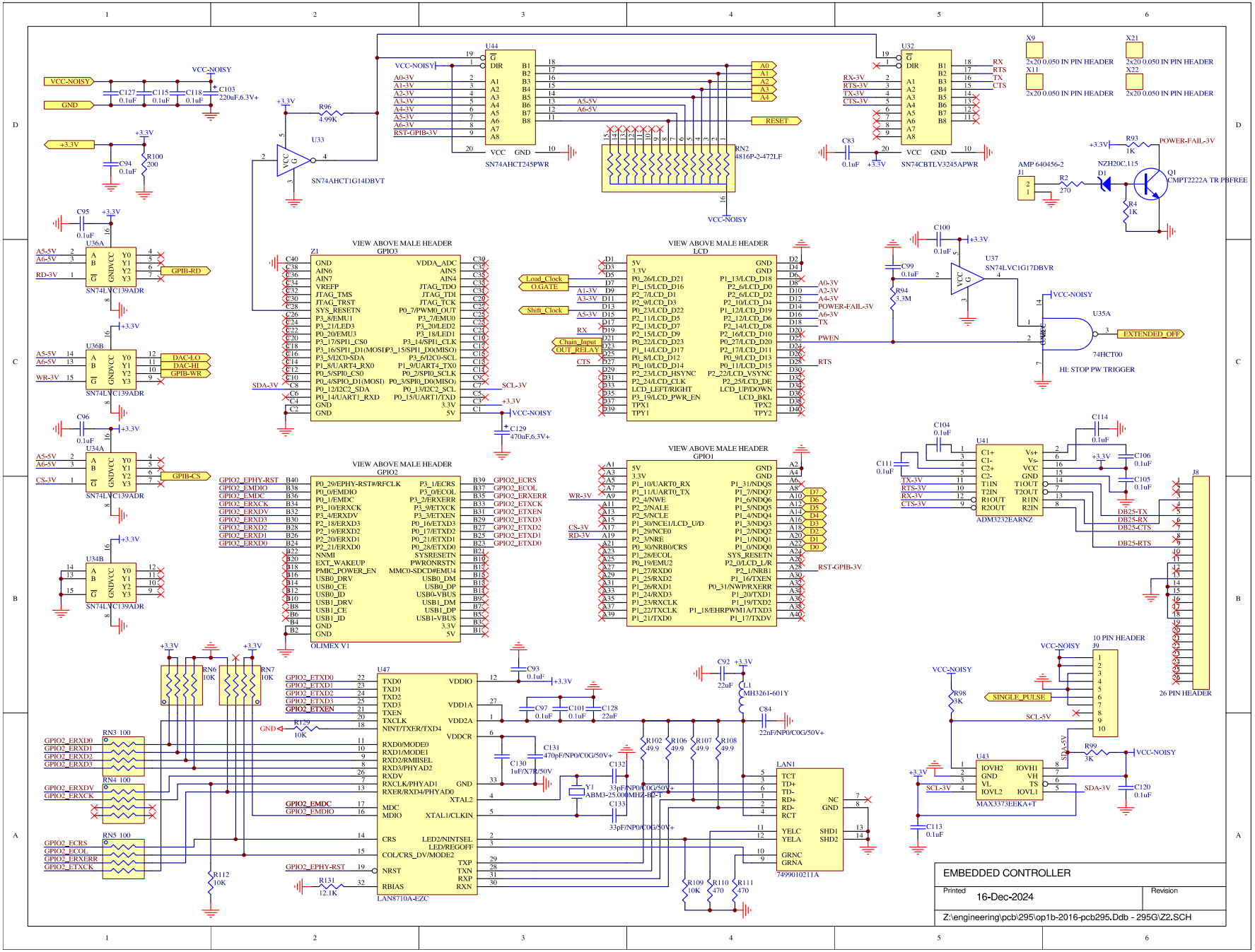

PCB 295G - MAIN CONTROL BOARD, 4 OF 13, GPIB INTERFACE

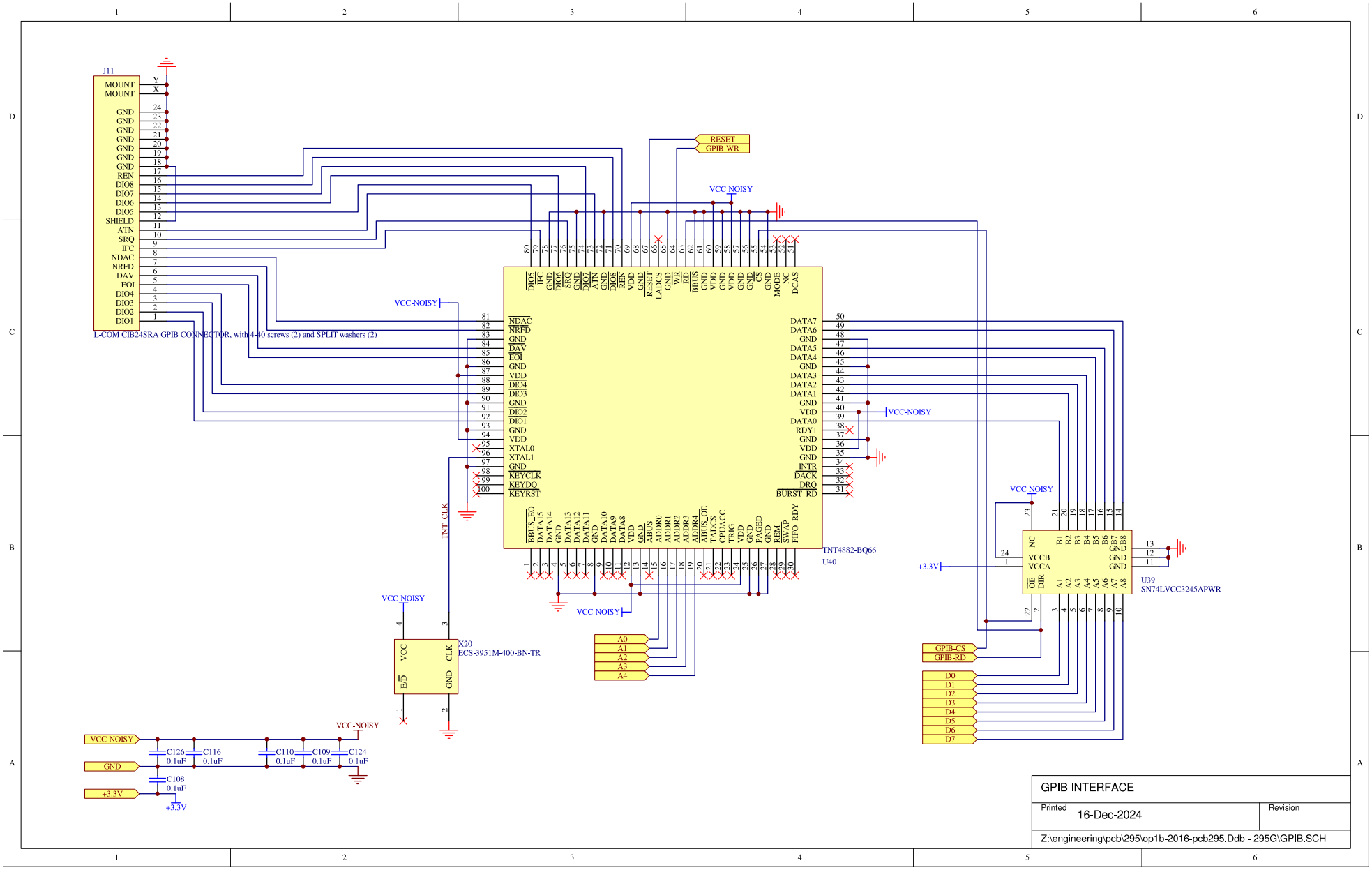

PCB 295G - MAIN CONTROL BOARD, 5 OF 13, DACs

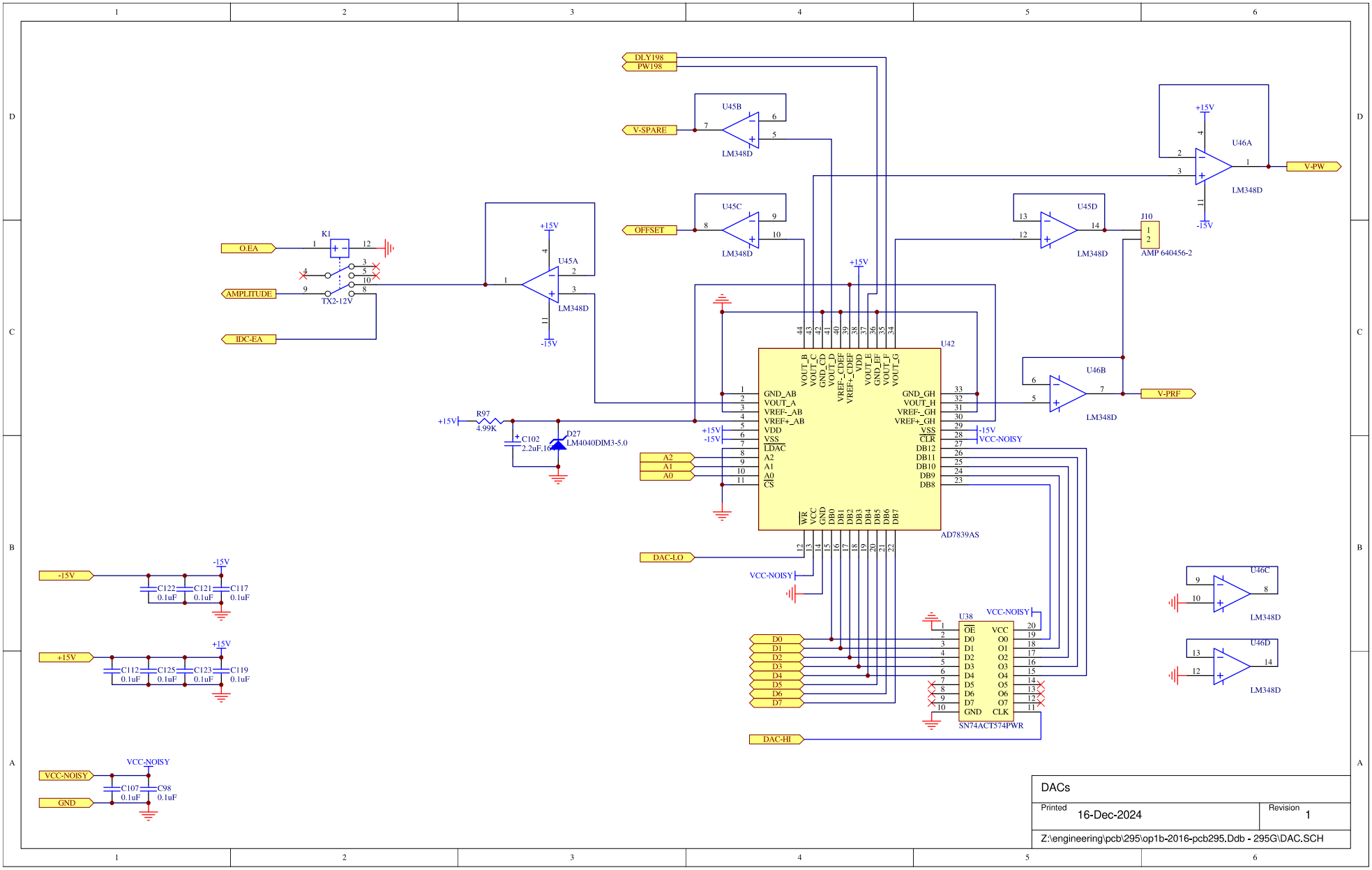

PCB 295G - MAIN CONTROL BOARD, 6 OF 13, TIMING TOP-LEVEL

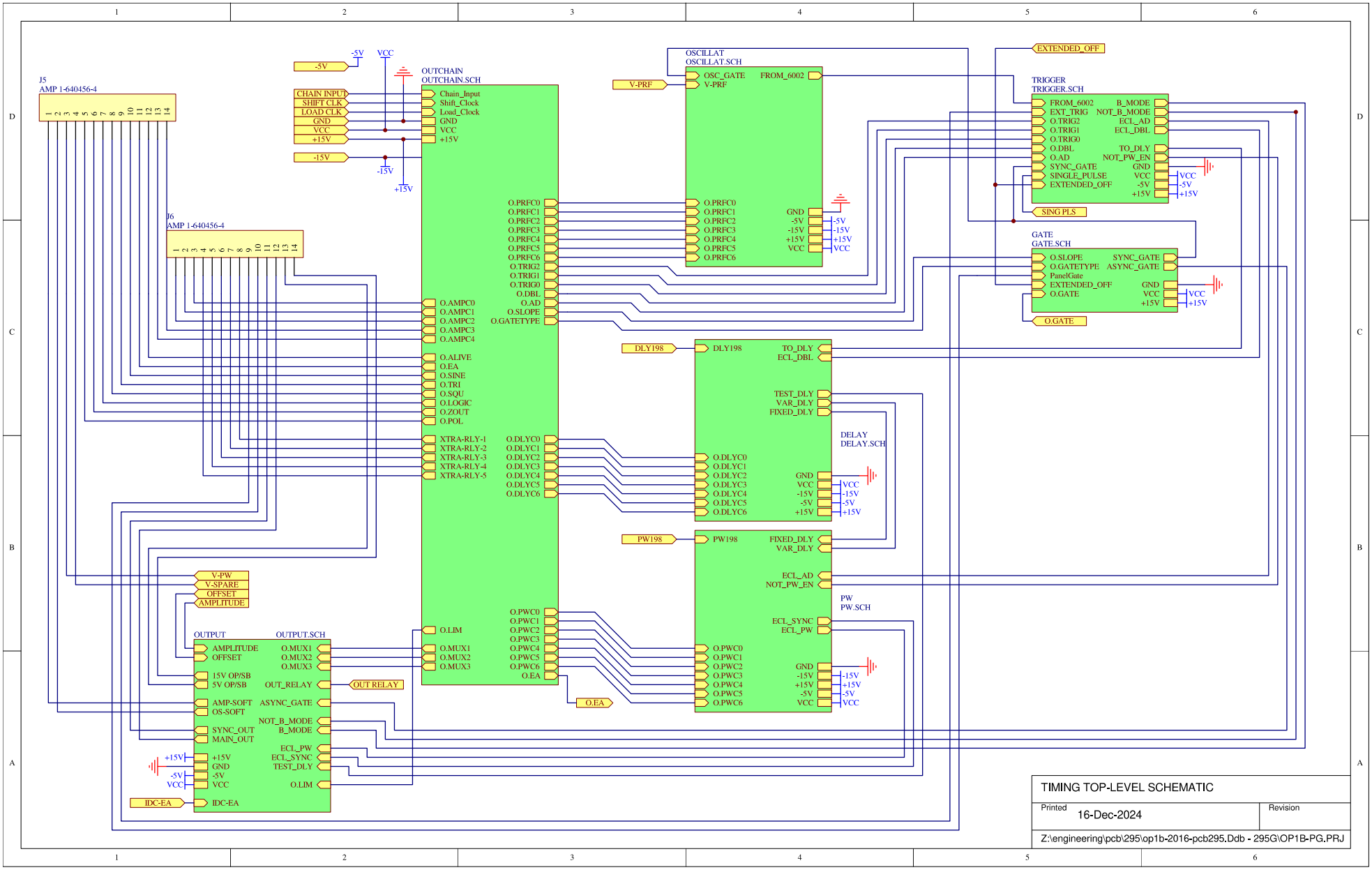

PCB 295G - MAIN CONTROL BOARD, 7 OF 13, GATE CIRCUIT

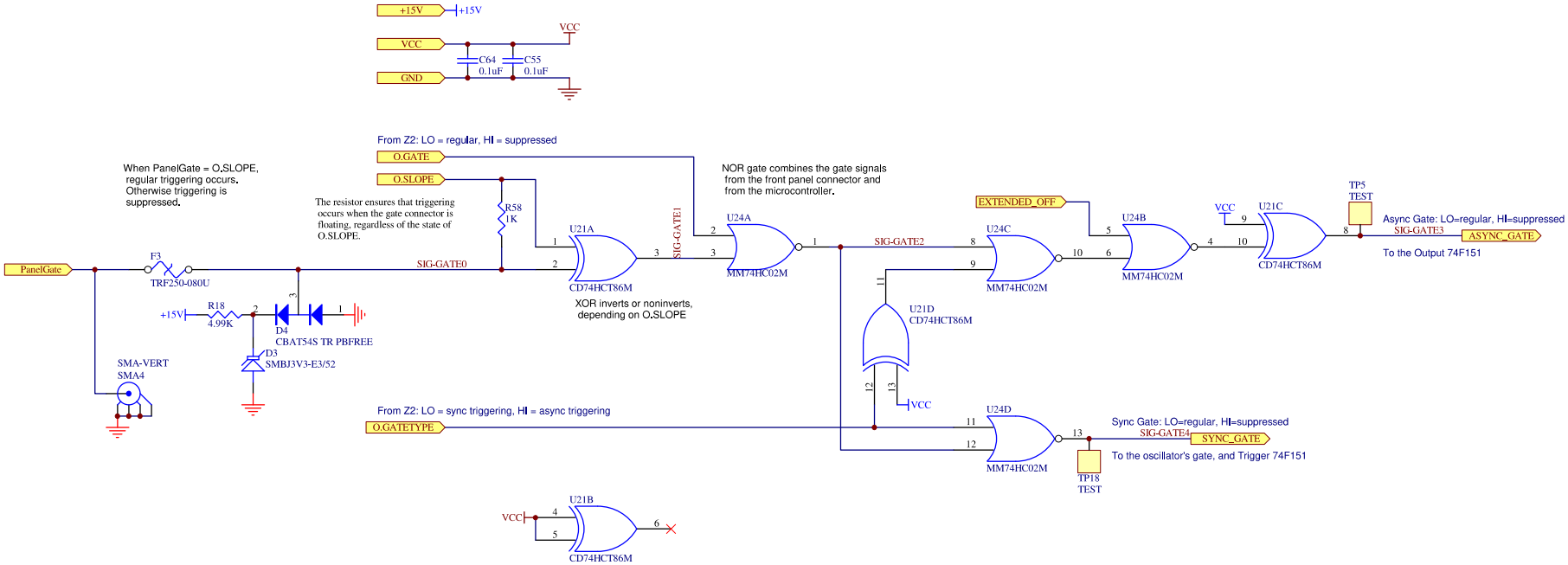

GATE CIRCUIT	
Printed 16-Dec-2024	Revision
Z:\engineering\pcb\295\op1b-2016-pcb295.Ddb - 295G\GATE.SCH	

PCB 295G - MAIN CONTROL BOARD, 8 OF 13, OSCILLATOR

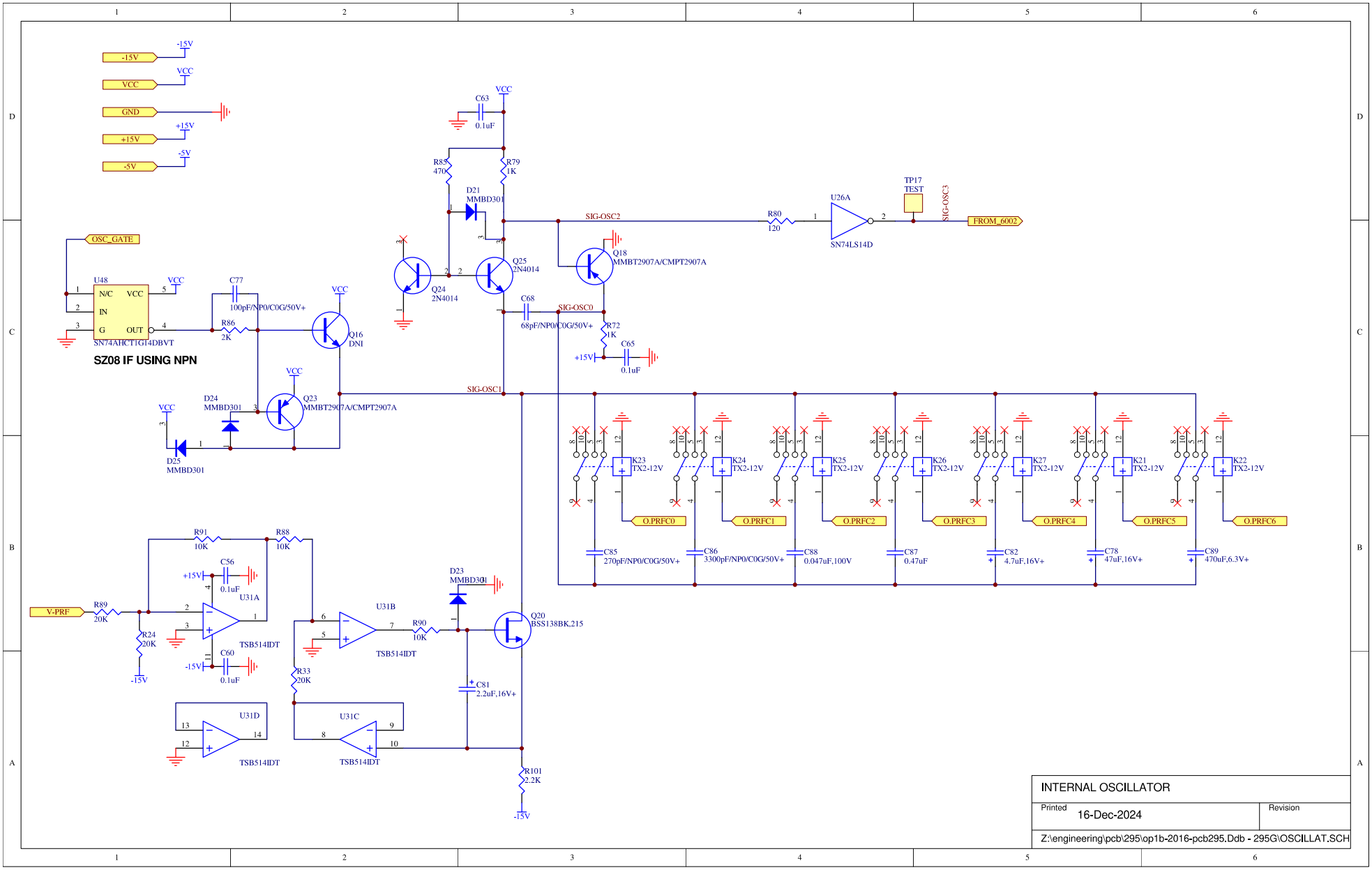

INTERNAL OSCILLATOR	
Printed 16-Dec-2024	Revision
Z:\engineering\pcb\295\op1b-2016-pcb295.Ddb - 295G\OSCILLAT.SCH	

PCB 295G - MAIN CONTROL BOARD, 9 OF 13, TTL OUTPUTS

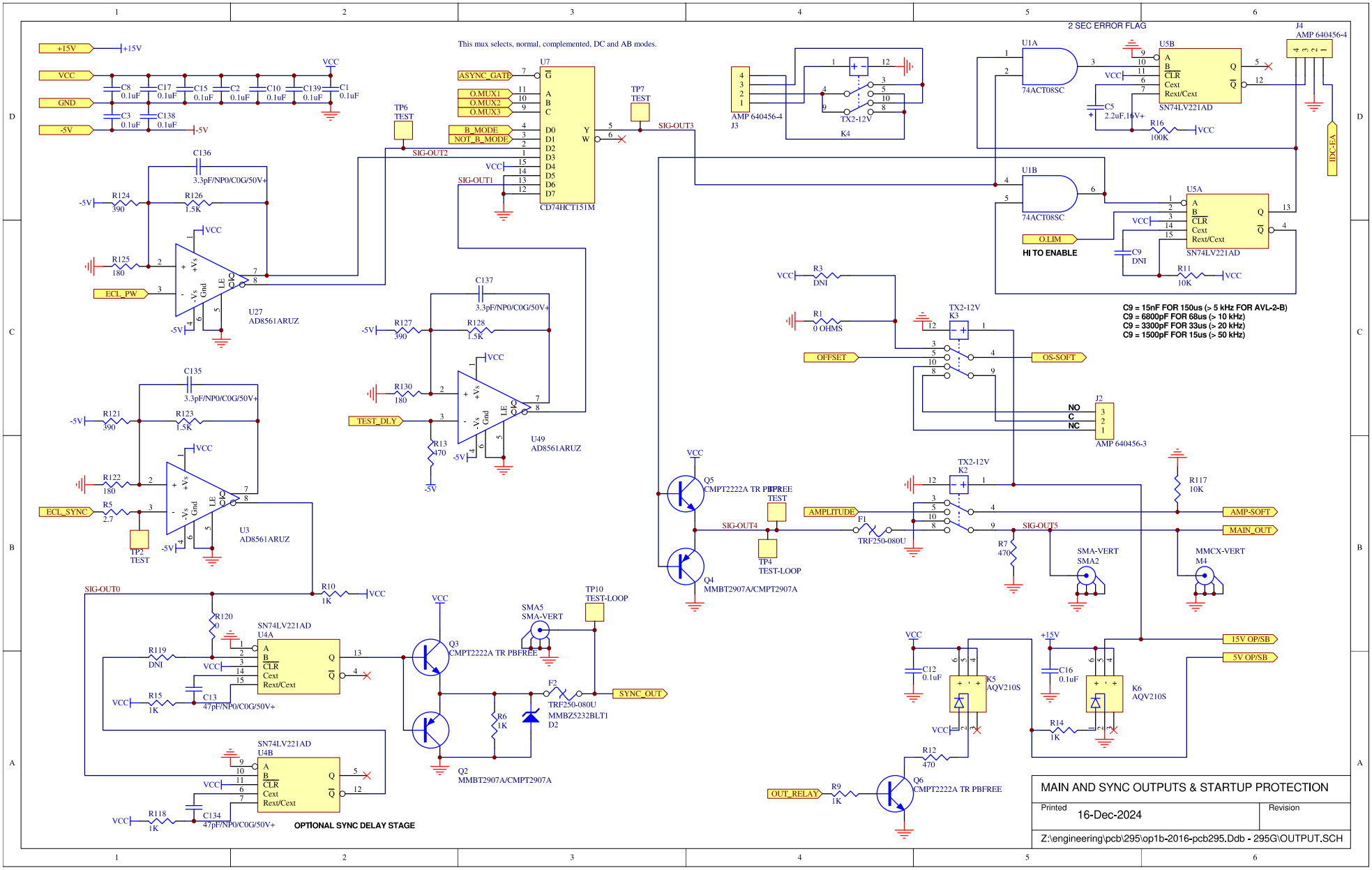

PCB 295G - MAIN CONTROL BOARD, 10 OF 13, DELAY CIRCUITS

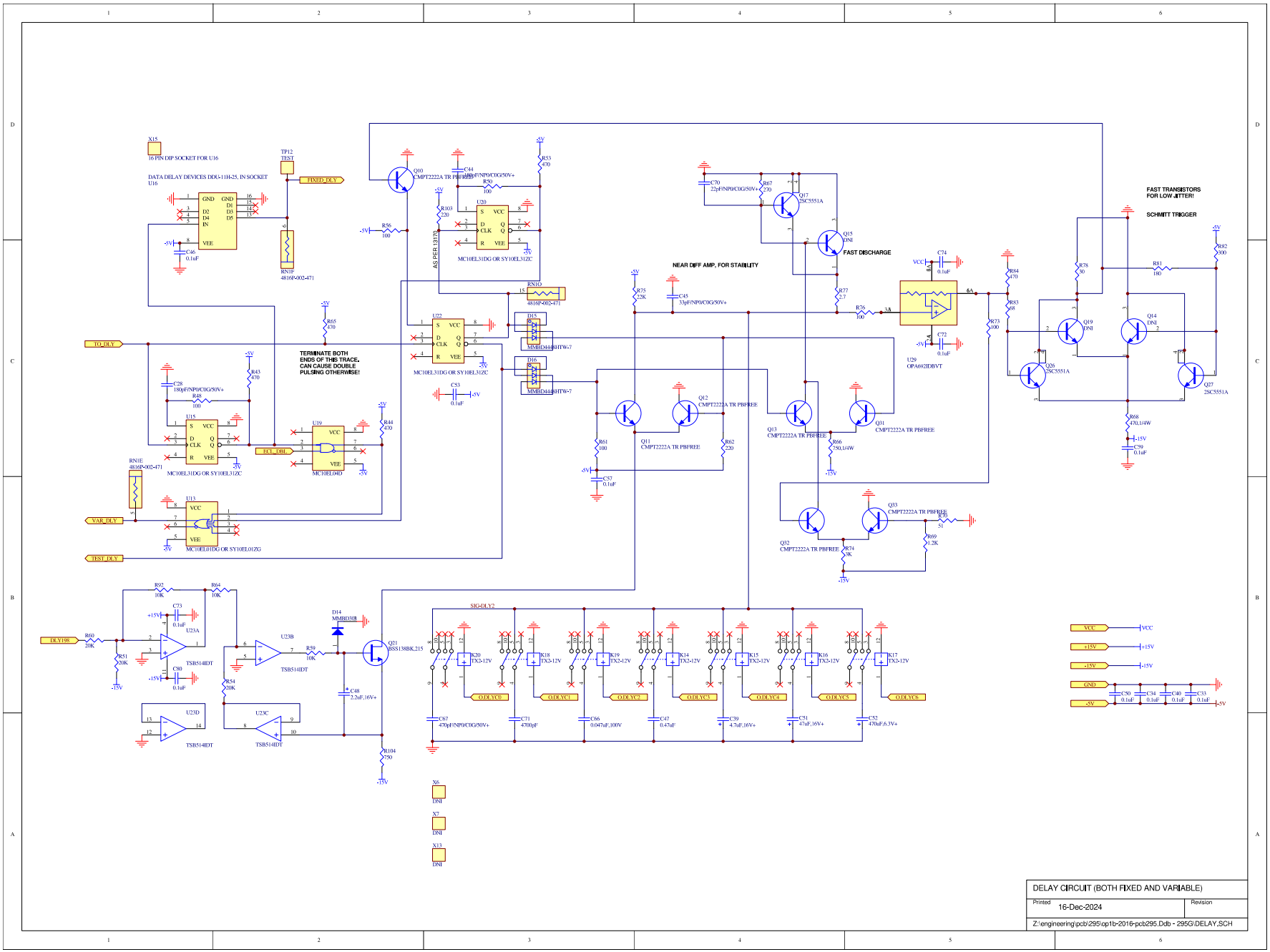

PCB 295G - MAIN CONTROL BOARD, 11 OF 13, PULSE WIDTH CIRCUIT

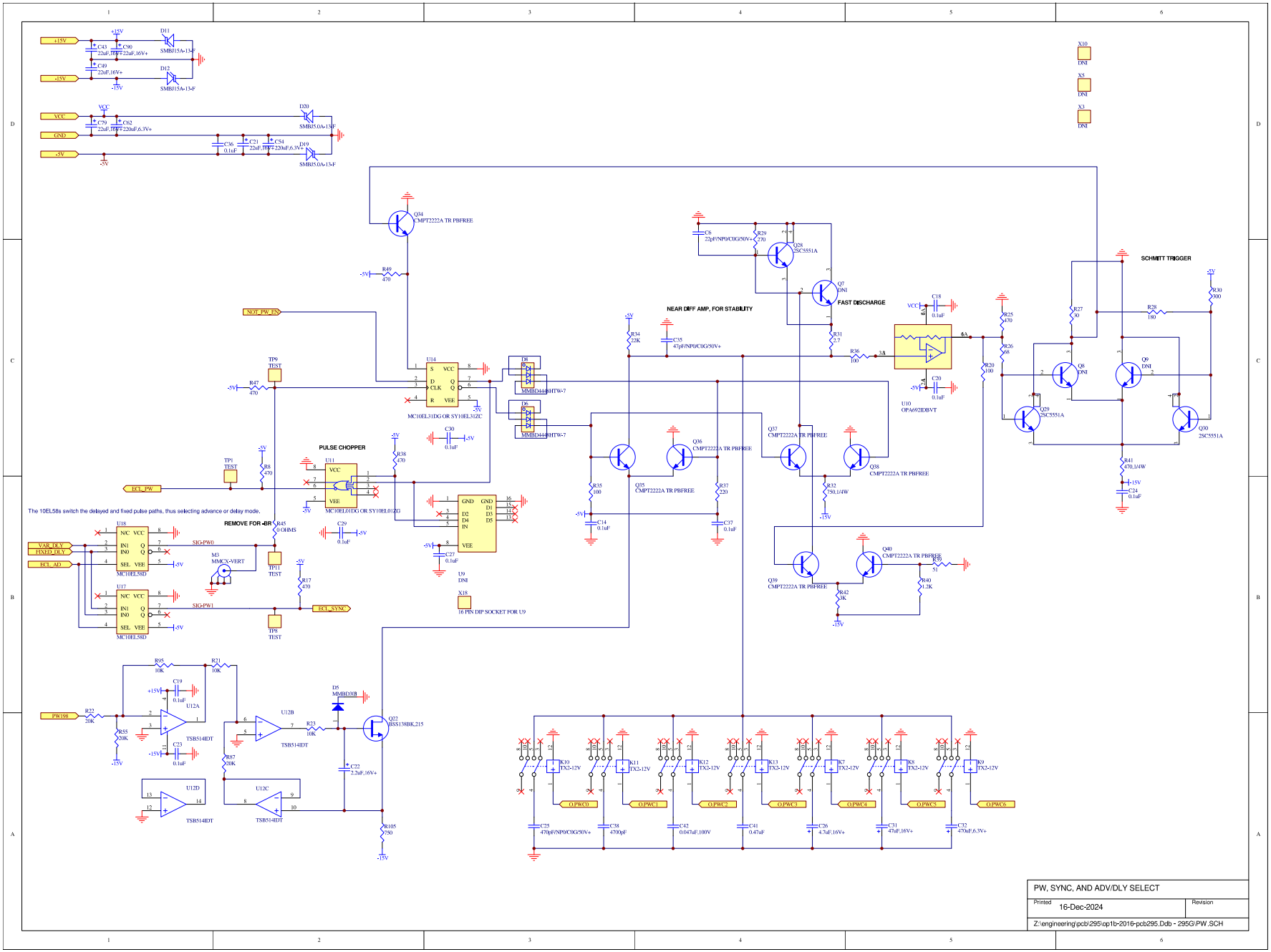

PCB 295G - MAIN CONTROL BOARD, 12 OF 13, TRIGGER SELECT

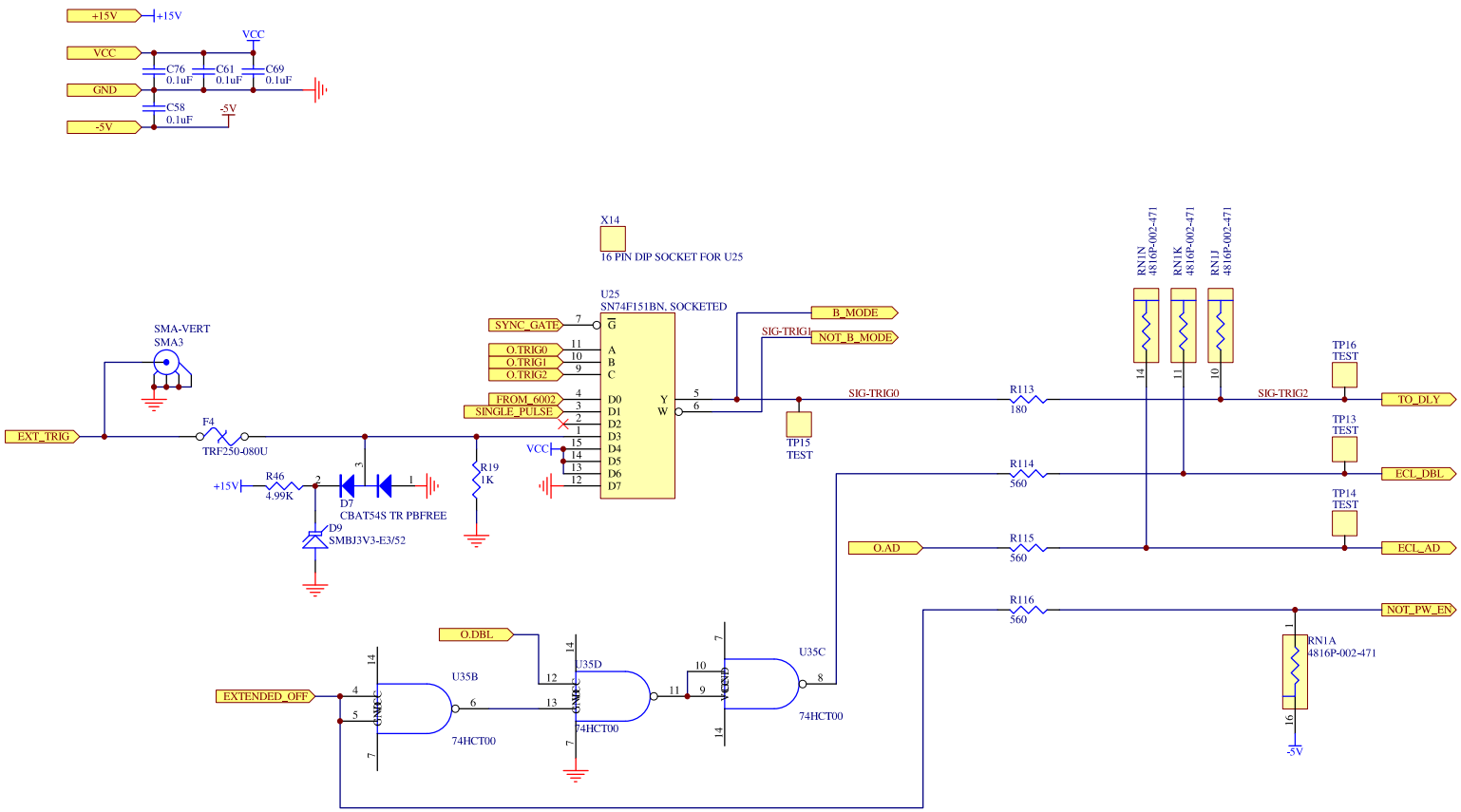

TURN OFF PW AND DOUBLE PULSE
WHEN OUTPUT IS OFF, AND FOR A
SHORT TIME AFTERWARDS

TRIGGER CONTROL AND TTL-TO-ECL	
Printed 16-Dec-2024	Revision
Z:\engineering\pcb\295\op1b-2016-pcb295.Ddb - 295G\TRIGGER.SCH	

PCB 295G - MAIN CONTROL BOARD, 13 OF 13, SHIFT REGISTERS

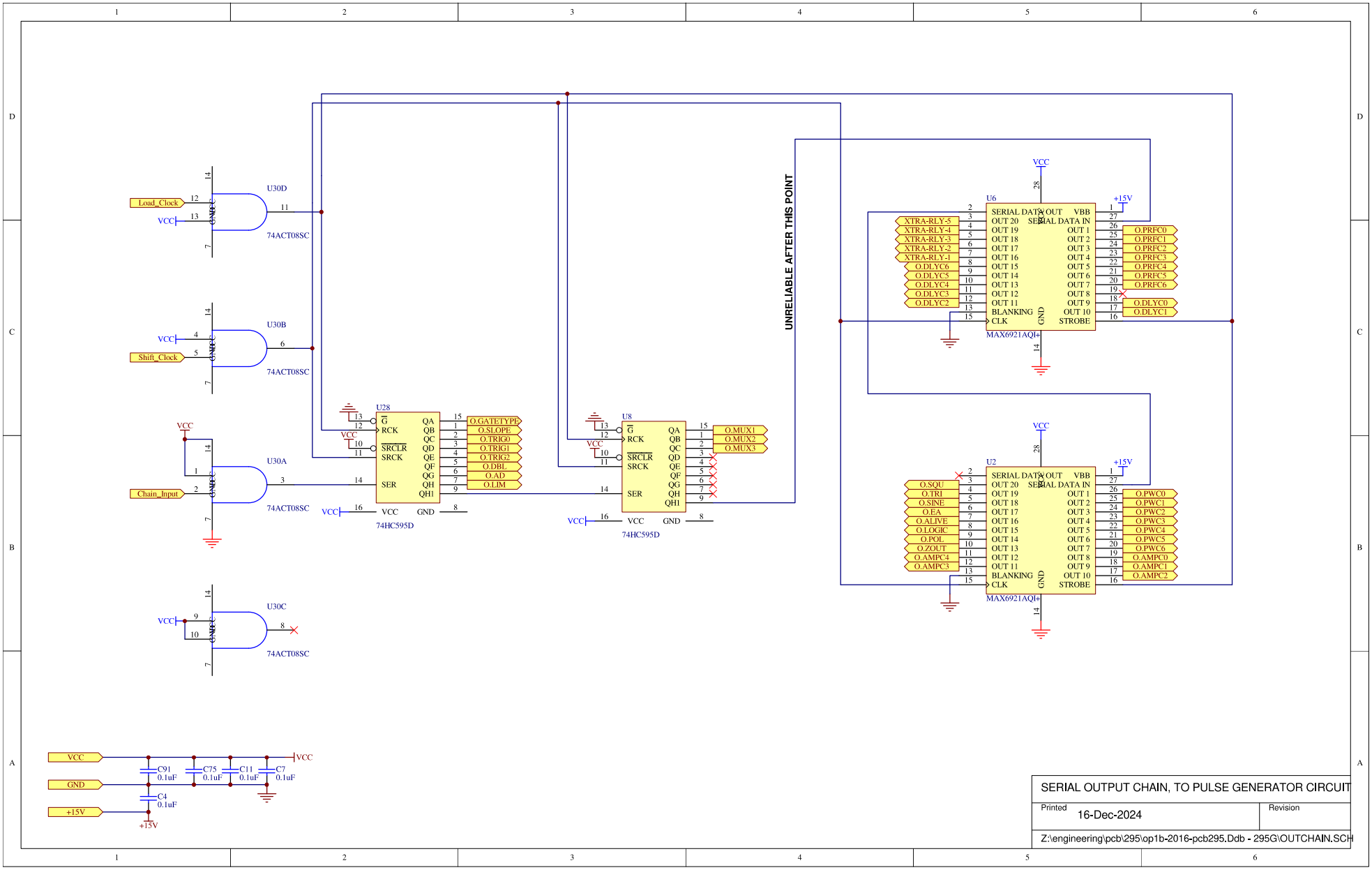

MAIN WIRING

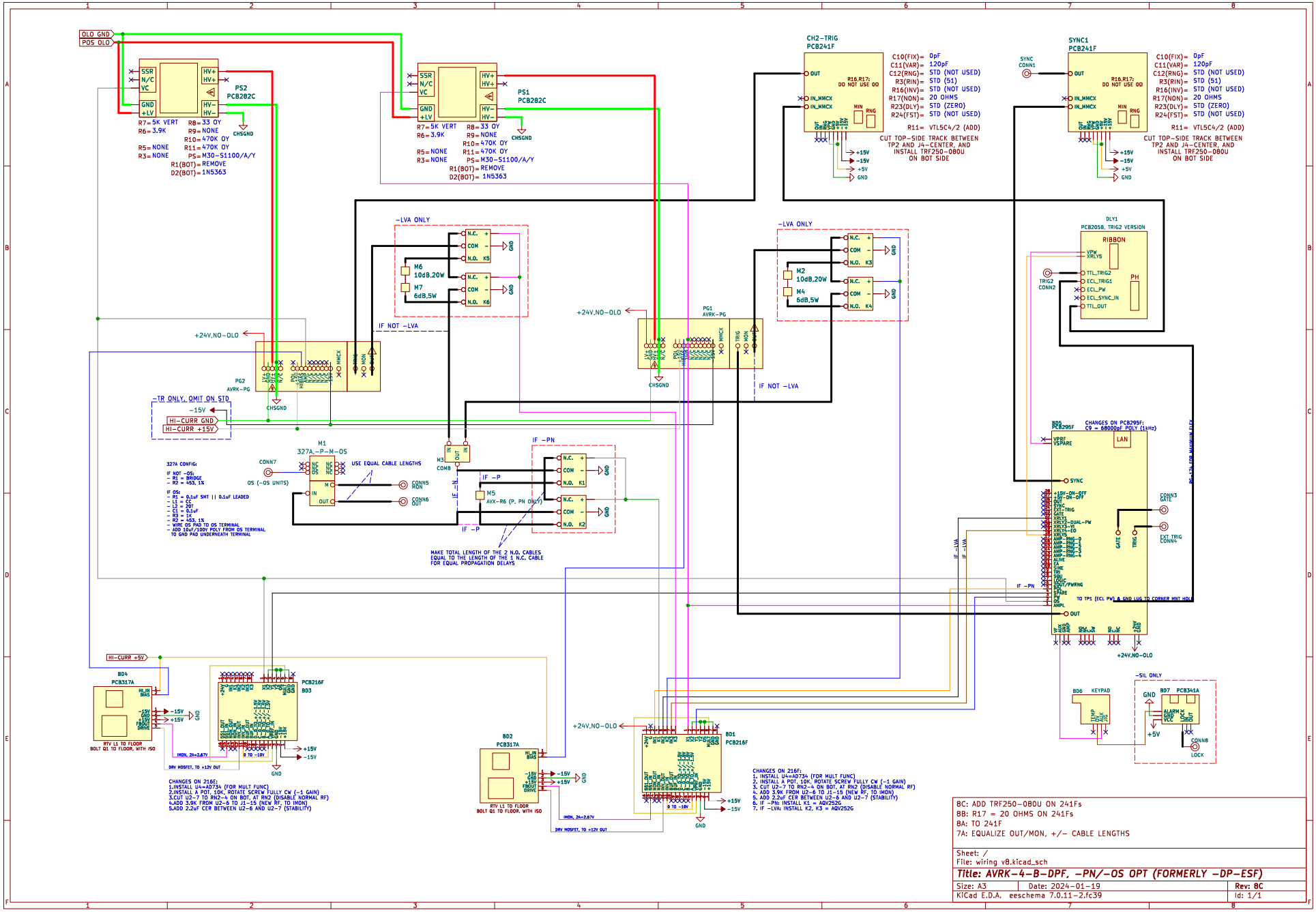
OLO GND
POS OLO
PS2
PCB282C
R7=5K VERT
R6=3.9K
R8=33 OY
R9=NONE
R10=470K OY
R11=470K OY
PS=M30-S1100/A/Y
R5=NONE
R3=NONE
R1(BOT)=REMOVE
D2(BOT)=1N5363
CHSGND
PS1
PCB282C
CH2-TRIG
PCB241F
C10(FIX)= 0pF
C11(VAR)= 120pF
C12(RNG)= STD (NOT USED)
R3(RIN)= STD (51)
R16(INV)= STD (NOT USED)
R17(NON)= 20 OHMS
R23(DLY)= STD (ZERO)
R24(FST)= STD (NOT USED)
R11= VTL5C4/2 (ADD)
CUT TOP-SIDE TRACK BETWEEN TP2 AND J4-CENTER, AND INSTALL TRF250-080U ON BOT SIDE
SYNC CONN1
SYNC1
PCB241F
-LVA ONLY
M6 10dB,20W
M7 6dB,5W
M2 10dB,20W
M4 6dB,5W
IF NOT -LVA
+24V,NO-OLO
PG1
AVRK-PG
PG2
AVRK-PG
DLY1
PCB205B, TRIG2 VERSION
RIBBON
TRIG2 CONN2
-TR ONLY, OMIT ON STD
-15V
HI-CURR GND
HI-CURR +15V
M1
327A,-P-M-OS
CONN7
OS (-OS UNITS)
USE EQUAL CABLE LENGTHS
CONN5 MON
CONN6 OUT
M3 COMB
IF -P
M5 AVX-R6 (P, PN ONLY)
IF -PN
IF -N
MAKE TOTAL LENGTH OF THE 2 N.O. CABLES EQUAL TO THE LENGTH OF THE 1 N.C. CABLE FOR EQUAL PROPAGATION DELAYS
BD9
PCB295F
CHANGES ON PCB295F: C9 = 68000pF POLY (14Hz)
LAN
SYNC
CONN3 GATE
EXT TRIG CONN4
TO TP1 (ECL PW) & GND LUG TO CORNER MNT HOLE
OUT
HI-CURR +5V
BD4
PCB317A
RTV L1 TO FLOOR
BOLT Q1 TO FLOOR, WITH ISO
PCB216F
BD3
IMON, 2A=2.67V
DRV MOSFET, TO +12V OUT
CHANGES ON 216F:
1.INSTALL U4=AD734 (FOR MULT FUNC)
2.INSTALL A POT, 10K, ROTATE SCREW FULLY CW (-1 GAIN)
3.CUT U2-7 TO RN2-4 ON BOT, AT RN2 (DISABLE NORMAL RF)
4.ADD 3.9K FROM U2-6 TO J1-15 (NEW RF, TO IMON)
5.ADD 2.2uF CER BETWEEN U2-6 AND U2-7 (STABILITY)
BD2
PCB317A
BD1
PCB216F
CHANGES ON 216F:
1. INSTALL U4=AD734 (FOR MULT FUNC)
2. INSTALL A POT, 10K, ROTATE SCREW FULLY CW (-1 GAIN)
3. CUT U2-7 TO RN2-4 ON BOT, AT RN2 (DISABLE NORMAL RF)
4. ADD 3.9K FROM U2-6 TO J1-15 (NEW RF, TO IMON)
5. ADD 2.2uF CER BETWEEN U2-6 AND U2-7 (STABILITY)
6. IF -PN: INSTALL K1 = AQV252G
7. IF -LVA: INSTALL K2, K3 = AQV252G
BD6 KEYPAD
-SIL ONLY
BD7 PCB341A
CONN8 LOCK
8C: ADD TRF250-080U ON 241Fs
8B: R17 = 20 OHMS ON 241Fs
8A: TO 241F
7A: EQUALIZE OUT/MON, +/- CABLE LENGTHS
Sheet: /
File: wiring v8.kicad_sch
Title: AVRK-4-B-DPF, -PN/-OS OPT (FORMERLY -DP-ESF)
Size: A3
Date: 2024-01-19
Rev: 8C
KiCad E.D.A. eeschema 7.0.11-2.fc39
Id: 1/1

PERFORMANCE CHECKSHEET