AVTECH ELECTROSYSTEMS LTD.

NANOSECOND WAVEFORM ELECTRONICS
SINCE 1975

☐ P.O. BOX 265
OGDENSBURG, NY
U.S.A. 13669-0265
TEL: (315) 472-5270
FAX: (613) 226-2802

TEL: 1-800-265-6681
FAX: 1-800-561-1970

e-mail: info@avtechpulse.com
http://www.avtechpulse.com/

☒ BOX 5120, LCD MERIVALE
OTTAWA, ONTARIO
CANADA K2C 3H4
TEL: (613) 226-5772
FAX: (613) 226-2802

INSTRUCTIONS

MODEL AVR-5B-B

0 TO 500 Volts, 10 kHz PULSE GENERATOR

WITH IEEE 488.2 AND RS-232 CONTROL

SERIAL NUMBER: _____

WARRANTY

Avtech Electrosystems Ltd. warrants products of its manufacture to be free from defects in material and workmanship under conditions of normal use. If, within one year after delivery to the original owner, and after prepaid return by the original owner, this Avtech product is found to be defective, Avtech shall at its option repair or replace said defective item. This warranty does not apply to units which have been dissembled, modified or subjected to conditions exceeding the applicable specifications or ratings. This warranty is the extent of the obligation assumed by Avtech with respect to this product and no other warranty or guarantee is either expressed or implied.

TECHNICAL SUPPORT

Phone: 613-226-5772 or 1-800-265-6681
Fax: 613-226-2802 or 1-800-561-1970

E-mail: info@avtechpulse.com
World Wide Web: http://www.avtechpulse.com

TABLE OF CONTENTS

WARRANTY.....2
TECHNICAL SUPPORT.....2
TABLE OF CONTENTS.....3
INTRODUCTION.....5
AVAILABLE OPTIONS.....5
HIGH-VOLTAGE PRECAUTIONS.....6
SPECIFICATIONS.....7
EUROPEAN REGULATORY NOTES.....8
EC DECLARATION OF CONFORMITY.....8
DIRECTIVE 2002/95/EC (RoHS).....8
INSTALLATION.....9
VISUAL CHECK.....9
POWER RATINGS.....9
CONNECTION TO THE POWER SUPPLY.....9
ENVIRONMENTAL CONDITIONS.....10
LABVIEW DRIVERS.....10
FUSES.....11
AC FUSE REPLACEMENT.....11
DC FUSE REPLACEMENT.....12
FUSE RATINGS.....12
FRONT PANEL CONTROLS.....13
REAR PANEL CONTROLS.....15
GENERAL INFORMATION.....17
BASIC PULSE CONTROL.....17
TRIGGER MODES.....18
PULSE WIDTH MODES.....19
GATING MODES.....19
ELECTRONIC AMPLITUDE CONTROL, "-EA" OPTION.....19
OUTPUT IMPEDANCE.....20
PREVENTING OUTPUT STAGE FAILURE.....20
OPERATIONAL CHECK.....21
PROGRAMMING YOUR PULSE GENERATOR.....24
KEY PROGRAMMING COMMANDS.....24

ALL PROGRAMMING COMMANDS....25
MECHANICAL INFORMATION....27
TOP COVER REMOVAL....27
RACK MOUNTING....27
ELECTROMAGNETIC INTERFERENCE....27
MAINTENANCE....28
REGULAR MAINTENANCE....28
CLEANING....28
WIRING DIAGRAMS....0
WIRING OF AC POWER 1/2....0
WIRING OF AC POWER 2/2....1
PCB 158G - LOW VOLTAGE POWER SUPPLY, 1/3....2
PCB 158G - LOW VOLTAGE POWER SUPPLY, 2/3....3
PCB 158G - LOW VOLTAGE POWER SUPPLY, 3/3....4
PCB 157 - HIGH-VOLTAGE DISCHARGE BOARD....5
PCB 156 - POLARITY CONTROL BOARD (-PN UNITS ONLY)....6
PCB 104D - KEYPAD / DISPLAY BOARD, 1/3....7
PCB 104D - KEYPAD / DISPLAY BOARD, 2/3....8
PCB 104D - KEYPAD / DISPLAY BOARD, 3/3....9
MAIN WIRING - DUAL POLARITY UNITS (-PN)....10
PERFORMANCE CHECK SHEET....0

Manual Reference: /fileserver1/officefiles/instructword/avr-5/AVR-5B-B,edition8.sxw.
Last modified February 29, 2024.
Copyright © 2024 Avtech Electrosystems Ltd, All Rights Reserved.

INTRODUCTION

The AVR-5B-B is a high performance, GPIB and RS232-equipped instrument capable of generating 0 to 500V at repetition rates up to 10 kHz into loads of 50Ω or higer. The pulse width is variable from 100 ns to 100 us, and the duty cycle may be as high as 1%. Rise and fall times are fixed at less than 30 ns. The AVR-5B-B includes an internal trigger source, but it can also be triggered or gated by an external source. A front-panel pushbutton can also be used to trigger the instrument. The output pulse width can be set to follow an input trigger pulse width.

The output voltage polarity depends on the model number:

"-P" units:	0 to +500 Volts
"-N" units:	0 to -500 Volts
"-PN" units:	0 to ±500 Volts

The AVR-5B-B features front panel keyboard and adjust knob control of the output pulse parameters along with a four line by 40-character backlit LCD display of the output amplitude, pulse width, pulse repetition frequency, and delay. The instrument includes memory to store up to four complete instrument setups. The operator may use the front panel or the computer interface to store a complete “snapshot” of all key instrument settings, and recall this setup at a later time.

The instrument is protected against overload conditions (such as short circuits) by an automatic control circuit. An internal power supply monitor removes the power to the output stage for five seconds if an average power overload exists. After that time, the unit operates normally for one second, and if the overload condition persists, the power is cut again. This cycle repeats until the overload is removed.

AVAILABLE OPTIONS

-EA Option:	The amplitude can be controlled by an externally generated 0 to +10V analog control voltage.
-R5 Option:	Rack-mount kit.
-HN Option:	The standard N-type output connector is replaced with an HN-type connector.
-MHV Option:	The standard N-type output connector is replaced with an MHV-type connector.
-SHV Option:	The standard N-type output connector is replaced with an SHV-type connector.

HIGH-VOLTAGE PRECAUTIONS

⚠ **CAUTION:** This instrument provides output voltages as high as 500 Volts under normal operating conditions, and generates up to 520V internally, so extreme caution must be employed when using this instrument. The instrument should only be used by individuals who are thoroughly skilled in high voltage laboratory techniques. The following precautions should always be observed:

1) Keep exposed high-voltage wiring to an absolute minimum.

2) Wherever possible, use shielded connectors and cabling.

3) Connect and disconnect loads and cables only when the instrument is turned off.

4) Keep in mind that all cables, connectors, oscilloscope probes, and loads must have an appropriate voltage rating.

Do not attempt any repairs on the instrument, beyond the fuse replacement procedures described in this manual. Contact Avtech technical support (see page 2 for contact information) if the instrument requires servicing.

SPECIFICATIONS

Model[1]:	AVR-5B-B
Amplitude: ($R_L \geq 50$ Ohms) [2,3]:	0 to 500 Volts
Output impedance:	2 Ohms, approximately
Rise and fall times:	≤ 30 ns
Pulse width[4]:	100 ns to 100 us
PRF: external trigger mode: internal trigger:	0 to 10 kHz 1 Hz to 10 kHz
Duty cycle (max):	1%
Average power out (max):	50 Watts
Polarity[5]:	Positive or negative or both (specify -P, -N, or -PN)
GPIB and RS-232 control[2]:	Standard on -B units.
LabView Drivers:	Available at www.avtechpulse.com/labview.
Propagation delay:	≤ 200 ns (Ext trig in to pulse out)
Jitter (Ext trig in to pulse out):	± 100 ps ± 0.03% of sync delay
Trigger required, Ext Trig mode:	Mode A: +5 Volt, 50 ns or wider (TTL) Mode B: +5 Volt, $PW_{IN} = PW_{OUT}$ (TTL)
Sync delay:	Variable 0 to ± 100 us (sync out to pulse out)
Sync output:	+3 Volts, 200 ns, will drive 50 Ohm loads
Gated operation:	Synchronous or asynchronous, active high or low, switchable. Suppresses triggering when active.
Connectors:	OUT: N[6] Trig: BNC Sync: BNC Gate: BNC
Power requirements:	100 - 240 Volts, 50 - 60 Hz
Dimensions (H x W x D):	100 mm x 430 mm x 375 mm (3.9” x 17” x 14.8”)
Chassis material:	cast aluminum frame and handles, blue vinyl on aluminum cover plates
Mounting:	Any
Temperature range:	+5°C to +40°C

1) -B suffix indicates GPIB equipped model.
2) For analog electronic control (0 to +10V) of amplitude, add the suffix -EA to the model number. Electronic control units also include the standard front panel controls.
3) For operation at amplitudes of less than 10% of full-scale, best results will be obtained by setting the amplitude near full-scale and using external attenuators on the output.
4) The output pulse width may also be controlled externally by applying a TTL-level trigger of the desired width to a rear-panel BNC connector ($PW_{IN} = PW_{OUT}$ mode).
5) Indicate desired polarity by suffixing the model number with -P or -N (i.e. positive or negative) or -PN for dual polarity option.
6) SHV, MHV or HN output connectors can also be provided. To specify, suffix the model number by -SHV, -MHV or -HN as required.

EUROPEAN REGULATORY NOTES

EC DECLARATION OF CONFORMITY

We

Avtech Electrosystems Ltd.
P.O. Box 5120, LCD Merivale
Ottawa, Ontario
Canada K2C 3H4

declare that this pulse generator meets the intent of Directive 89/336/EEC for Electromagnetic Compatibility. Compliance pertains to the following specifications as listed in the official Journal of the European Communities:

EN 50081-1 Emission

EN 50082-1 Immunity

and that this pulse generator meets the intent of the Low Voltage Directive 72/23/EEC as amended by 93/68/EEC. Compliance pertains to the following specifications as listed in the official Journal of the European Communities:

EN 61010-1:2001 Safety requirements for electrical equipment for measurement, control, and laboratory use

DIRECTIVE 2002/95/EC (RoHS)

This instrument is exempt from Directive 2002/95/EC of the European Parliament and of the Council of 27 January 2003 on the Restriction of the use of certain Hazardous Substances (RoHS) in electrical and electronic equipment. Specifically, Avtech instruments are considered "Monitoring and control instruments" (Category 9) as defined in Annex 1A of Directive 2002/96/EC. The Directive 2002/95/EC only applies to Directive 2002/96/EC categories 1-7 and 10, as stated in the "Article 2 - Scope" section of Directive 2002/95/EC.

INSTALLATION

VISUAL CHECK

After unpacking the instrument, examine to ensure that it has not been damaged in shipment. Visually inspect all connectors, knobs, liquid crystal displays (LCDs), and the handles. Confirm that a power cord, a GPIB cable, and two instrumentation manuals (this manual and the “Programming Manual for -B Instruments”) are with the instrument. If the instrument has been damaged, file a claim immediately with the company that transported the instrument.

POWER RATINGS

This instrument is intended to operate from 100 - 240 V, 50 - 60 Hz.

The maximum power consumption is 125 Watts. Please see the “FUSES” section for information about the appropriate AC and DC fuses.

This instrument is an “Installation Category II” instrument, intended for operation from a normal single-phase supply.

CONNECTION TO THE POWER SUPPLY

An IEC-320 three-pronged recessed male socket is provided on the back panel for AC power connection to the instrument. One end of the detachable power cord that is supplied with the instrument plugs into this socket. The other end of the detachable power cord plugs into the local mains supply. Use only the cable supplied with the instrument. The mains supply must be earthed, and the cord used to connect the instrument to the mains supply must provide an earth connection. (The supplied cord does this.) The table below describes the power cord that is supplied with this instrument, depending on the destination region:

Destination Region	Description	Volex (http://www.volex.com) Part Number	Newark (http://www.newark.com) Stock Number
Continental Europe	European CEE 7/7 “Schuko” 230V, 50Hz	17850-C3-326	44F1841
United Kingdom	BS 1363, 230V, 50Hz	17962-C3-10	84F1025
Switzerland	SEV 1011, 230V, 50Hz	2102H-C3-10	93F2452
Israel	SI 32, 220V, 50Hz	2115H-C3-10	04F1115
North America, and all other areas	NEMA 5-15, 120V, 60 Hz	17250-B1-10	36F1255

ENVIRONMENTAL CONDITIONS

This instrument is intended for use under the following conditions:

1. indoor use;
2. altitude up to 2 000 m;
3. temperature 5 °C to 40 °C;
4. maximum relative humidity 80 % for temperatures up to 31 °C decreasing linearly to 50 % relative humidity at 40 °C;
5. Mains supply voltage fluctuations up to ±10 % of the nominal voltage;
6. no pollution or only dry, non-conductive pollution.

LABVIEW DRIVERS

A LabVIEW driver for this instrument is available for download on the Avtech web site, at http://www.avtechpulse.com/labview. A copy is also available in National Instruments' Instrument Driver Library at http://www.natinst.com/.

FUSES

This instrument contains four fuses. All are accessible from the rear-panel. Two protect the AC prime power input, and two protect the internal DC power supplies. The locations of the fuses on the rear panel are shown in the figure below:

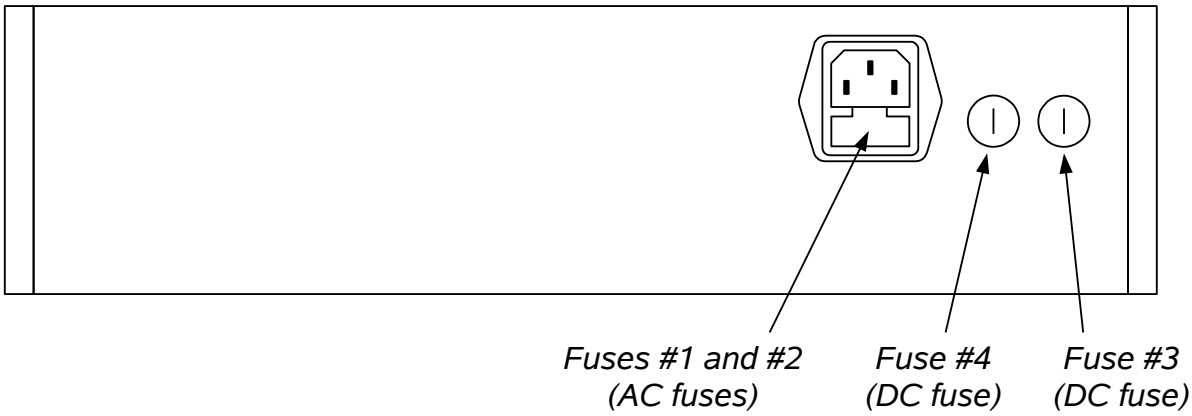

AC FUSE REPLACEMENT

To physically access the AC fuses, the power cord must be detached from the rear panel of the instrument. The fuse drawer may then be extracted using a small flat-head screwdriver, as shown below:

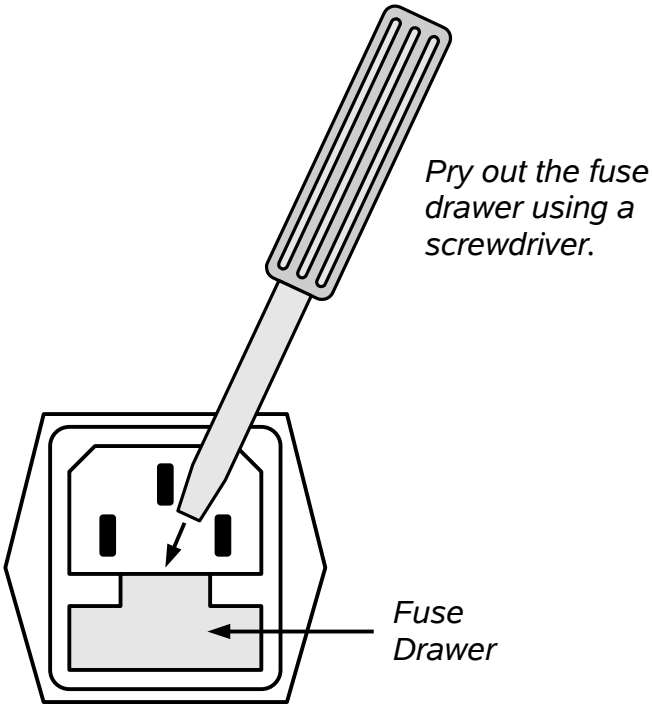

DC FUSE REPLACEMENT

The DC fuses may be replaced by inserting the tip of a flat-head screwdriver into the fuse holder slot, and rotating the slot counter-clockwise. The fuse and its carrier will then pop out.

FUSE RATINGS

The following table lists the required fuses:

Fuses	Nominal Mains Voltage	Rating	Case Size	Manufacturer's Part Number (Wickmann)	Distributor's Part Number (Digi-Key)
#1, #2 (AC)	115 V	1.6A, 250V, Time-Delay	5 x 20 mm	1951160000	WK5053-ND
	230 V	0.8A, 250V, Time-Delay	5 x 20 mm	1950800000	WK5046-ND
#3 (DC)	N/A	4.0A, 250V, Time-Delay	5 x 20 mm	1951400000	WK5062-ND
#4 (DC)	N/A	3.15A, 250V, Time-Delay	5 x 20 mm	1951315000	WK5124-ND

The fuse manufacturer is Wickmann (http://www.wickmann.com/).

Replacement fuses may be easily obtained from Digi-Key (http://www.digikey.com/) and other distributors.

FRONT PANEL CONTROLS

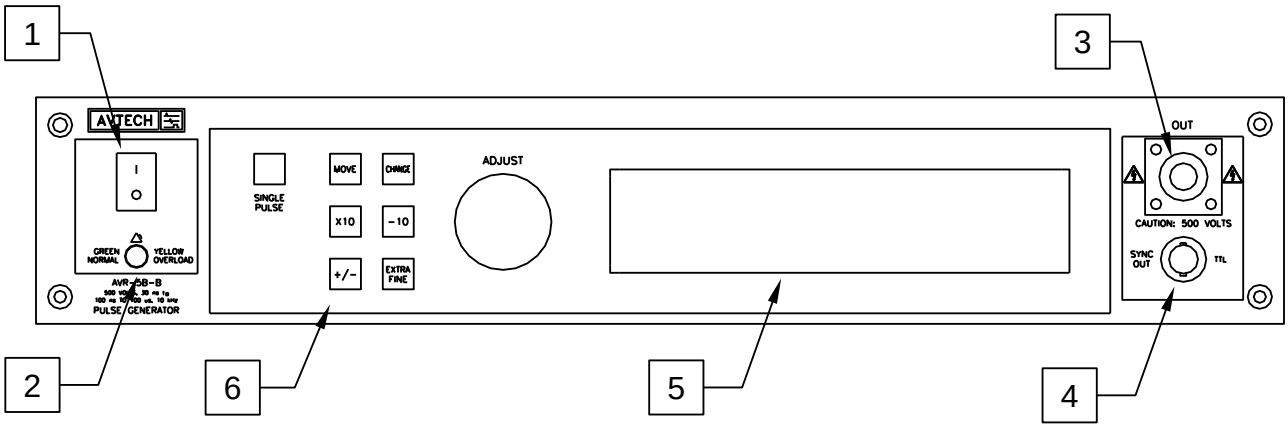

1. POWER Switch. This is the main power switch. When turning the instrument on, there may be a delay of several seconds before the instrument appears to respond.

2. OVERLOAD Indicator. When the instrument is powered, this indicator is normally green, indicating normal operation. If this indicator is yellow, an internal automatic overload protection circuit has been tripped. If the unit is overloaded (by operating at an exceedingly high duty cycle or by operating into a very low impedance), the protective circuit will disable the output of the instrument and turn the indicator light yellow. The light will stay yellow (i.e. output disabled) for about 5 seconds after which the instrument will attempt to re-enable the output (i.e. light green) for about 1 second. If the overload condition persists, the output will be disabled again (i.e. light yellow) for another 5 seconds. If the overload condition has been removed, the instrument will resume normal operation.

   This overload indicator may flash yellow briefly at start-up. This is not a cause for concern.

3. OUT CONNECTOR. This N-type connector provides the output to a 50Ω (or higher) load.

   ⚠ Caution: Voltages as high as ±500V may be present on the center conductor of this output connector. Avoid touching this conductor. Connect to this connector using standard coaxial cable, to ensure that the center conductor is not exposed.

4. SYNC OUT. This connector supplies a SYNC output that can be used to trigger other equipment, particularly oscilloscopes. This signal leads (or lags) the main output by a duration set by the "DELAY" controls and has an approximate amplitude of +3 Volts to R_L > 1kΩ with a pulse width of approximately 100 ns.

5. LIQUID CRYSTAL DISPLAY (LCD). This LCD is used in conjunction with the keypad to change the instrument settings. Normally, the main menu is displayed, which lists the key adjustable parameters and their current values. The

“Programming Manual for -B Instruments” describes the menus and submenus in detail.

6. KEYPAD.

Control Name	Function
MOVE	This moves the arrow pointer on the display.
CHANGE	This is used to enter the submenu, or to select the operating mode, pointed to by the arrow pointer.
×10	If one of the adjustable numeric parameters is displayed, this increases the setting by a factor of ten.
÷10	If one of the adjustable numeric parameters is displayed, this decreases the setting by a factor of ten.
+/-	If one of the adjustable numeric parameters is displayed, and this parameter can be both positive or negative, this changes the sign of the parameter.
EXTRA FINE	This changes the step size of the ADJUST knob. In the extra-fine mode, the step size is twenty times finer than in the normal mode. This button switches between the two step sizes.
ADJUST	This large knob adjusts the value of any displayed numeric adjustable values, such as frequency, pulse width, etc. The adjust step size is set by the "EXTRA FINE" button. When the main menu is displayed, this knob can be used to move the arrow pointer.

REAR PANEL CONTROLS

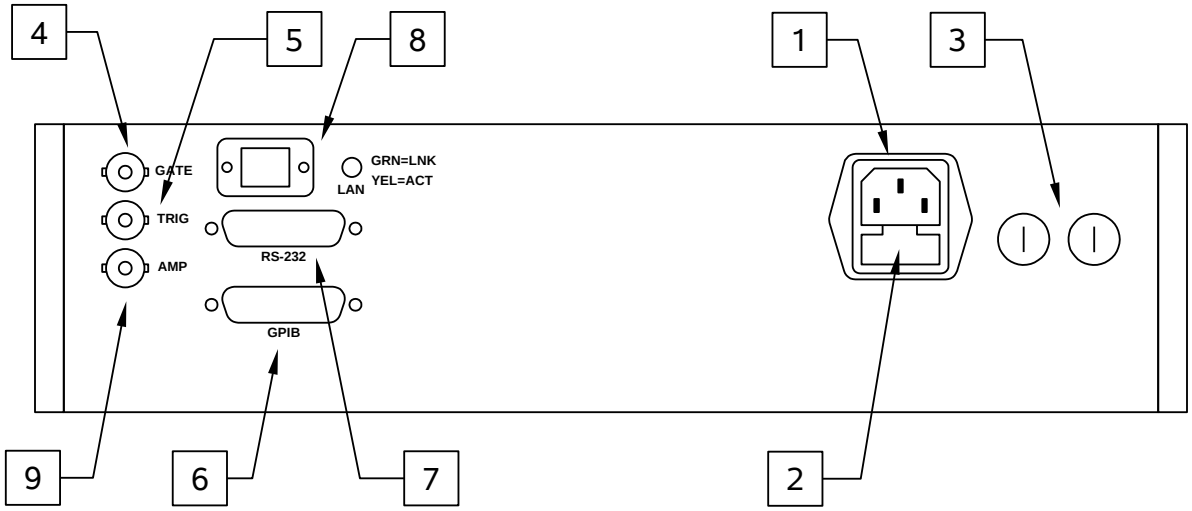

1. AC POWER INPUT. An IEC-320 C14 three-pronged recessed male socket is provided on the back panel for AC power connection to the instrument. One end of the detachable power cord that is supplied with the instrument plugs into this socket.

2. AC FUSE DRAWER. The two fuses that protect the AC input are located in this drawer. Please see the “FUSES” section of this manual for more information.

3. DC FUSES. These two fuses protect the internal DC power supplies. Please see the “FUSES” sections of this manual for more information.

4. GATE. This TTL-level (0 and +5V) logic input can be used to gate the triggering of the instrument. This input can be either active high or active low, depending on the front panel settings or programming commands. (The instrument triggers normally when this input is unconnected). When set to active high mode, this input is pulled-down to ground by a 1 kΩ resistor. When set to active low mode, this input is pulled-up to +5V by a 1 kΩ resistor.

5. TRIG. This TTL-level (0 and +5V) logic input can be used to trigger the instrument, if the instrument is set to triggering externally. The instrument triggers on the rising edge of this input. The input impedance of this input is 1 kΩ. (Depending on the length of cable attached to this input, and the source driving it, it may be desirable to add a coaxial 50 Ohm terminator to this input to provide a proper transmission line termination. The Pasternack (www.pasternack.com) PE6008-50 BNC feed-thru 50 Ohm terminator is suggested for this purpose.)

   When triggering externally, the instrument can be set such that the output pulse width tracks the pulse width on this input, or the output pulse width can be set independently.

6. GPIB Connector. A standard GPIB cable can be attached to this connector to allow the instrument to be computer-controlled. See the “Programming Manual for -B Instruments” for more details on GPIB control.

7. RS-232 Connector. A standard serial cable with a 25-pin male connector can be attached to this connector to allow the instrument to be computer-controlled. See the “Programming Manual for -B Instruments” for more details on RS-232 control.

8. LAN Connector and Indicator. (Optional feature. Present on -TNT units only.) The -TNT option "Internet-enables" Avtech pulse generators by adding this standard Ethernet port to the rear panel, in addition to the IEEE-488.2 GPIB and RS-232 ports normally found on "-B" units. Commands are sent using the standard Telnet protocol. The SCPI-compliant command set is the same as that used for GPIB and RS-232 control. The -TNT option uses the Dynamic Host Configuration Protocol (DHCP) to obtain its network address. A DHCP server must be present on the local network for the -TNT option to operate properly.

9. AMP Connector. (Optional feature. Present on "-EA" units only.) The output amplitude can be set to track the voltage on this input. Zero Volts in corresponds to zero amplitude output, and +10V in corresponds to maximum amplitude out. This mode is activated by selecting "Ext Control" on the front-panel amplitude menu, or with the "source:voltage external" command.

GENERAL INFORMATION

BASIC PULSE CONTROL

This instrument can be triggered by its own internal clock or by an external TTL trigger signal. In either case, two output channels respond to the trigger: OUT and SYNC. The OUT channel is the signal that is applied to the load. Its amplitude and pulse width are variable. The SYNC pulse is a fixed-width TTL-level reference pulse used to trigger oscilloscopes or other measurement systems. When the delay is set to a positive value the SYNC pulse precedes the OUT pulse. When the delay is set to a negative value the SYNC pulse follows the OUT pulse.

These pulses are illustrated below, assuming internal triggering and a positive delay:

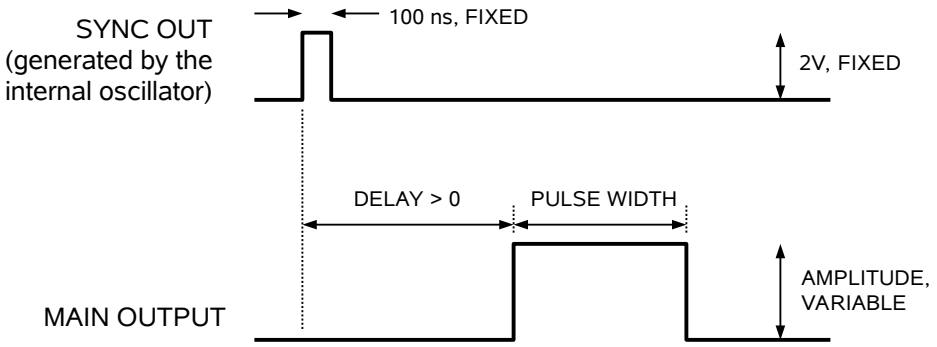

Figure A

If the delay is negative, the order of the SYNC and OUT pulses is reversed:

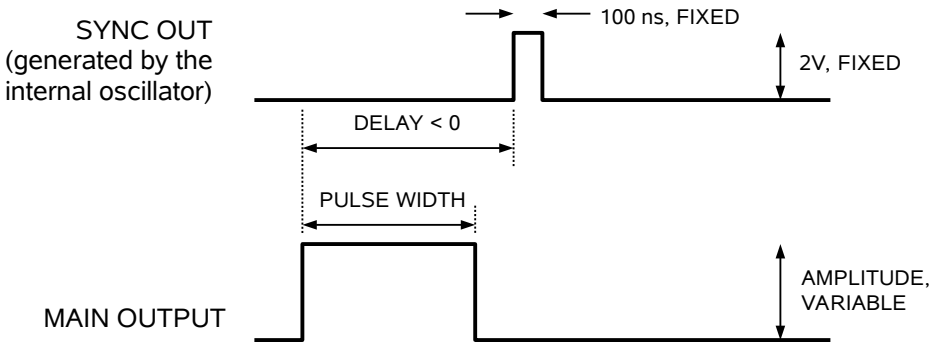

Figure B

The next figure illustrates the relationship between the signal when an external TTL-level trigger is used:

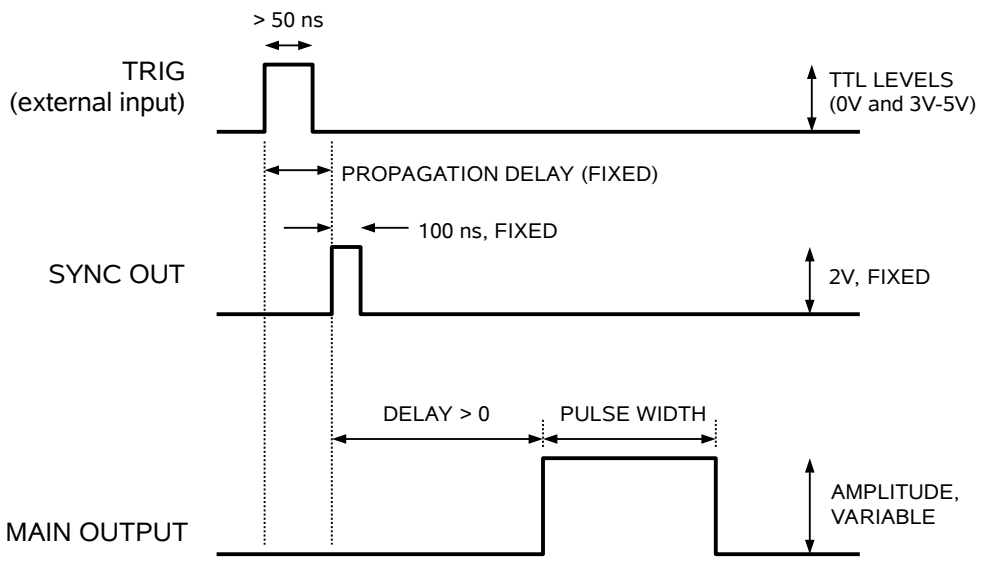

Figure C

As before, if the delay is negative, the order of the SYNC and OUT pulses is reversed.

The last figure illustrates the relationship between the signal when an external TTL-level trigger is used in the PW_{IN}=PW_{OUT} mode. In this case, the output pulse width equals the external trigger's pulse width (approximately), and the delay circuit is bypassed:

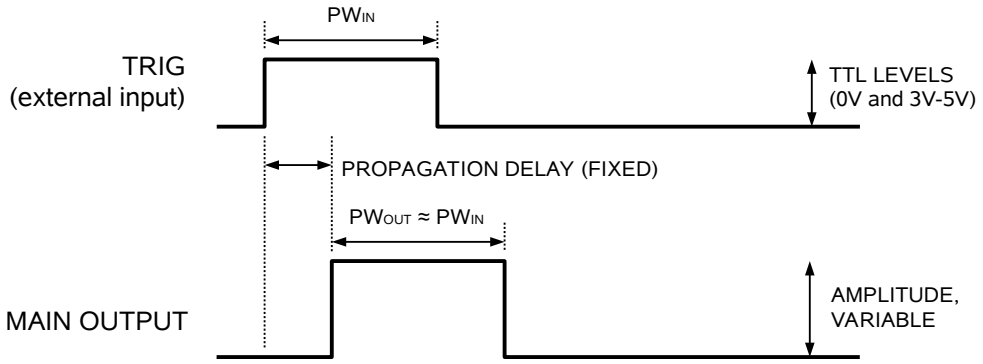

Figure D

The delay, pulse width, and frequency (when in the internal mode), of the OUT pulse can be varied with front panel controls or via the GPIB or RS-232 computer interfaces.

TRIGGER MODES

This instrument has four trigger modes:

- Internal Trigger: the instrument controls the trigger frequency, and generates the clock internally.

- External Trigger: the instrument is triggered by an external TTL-level clock on the back-panel TRIG connector.

- Manual Trigger: the instrument is triggered by the front-panel “SINGLE PULSE” pushbutton.

- Hold Trigger: the instrument is set to not trigger at all.

These modes can be selected using the front panel trigger menu, or by using the appropriate programming commands. (See the “Programming Manual for -B Instruments” for more details.)

PULSE WIDTH MODES

This instrument has two pulse width modes:

- Normal: the instrument controls the output pulse width.

- PW_{IN}=PW_{OUT}: the output pulse width equals the pulse width of the trigger signal on the “TRIG” connector. The instrument must be in the external trigger mode.

These modes can be selected using the front panel pulse width menu, or by using the appropriate programming commands. (See the “Programming Manual for -B Instruments” for more details.)

GATING MODES

Triggering can be suppressed by a TTL-level signal on the rear-panel GATE connector. The instrument can be set to stop triggering when this input high or low, using the front-panel gate menu or the appropriate programming commands. This input can also be set to act synchronously or asynchronously. When set to asynchronous mode, the GATE will disable the output immediately. Output pulses may be truncated. When set to synchronous mode, the output will complete the full pulse width if the output is high, and then stop triggering. No pulses are truncated in this mode.

ELECTRONIC AMPLITUDE CONTROL, "-EA" OPTION

The output amplitude can be set to track the voltage on this input. Zero Volts in corresponds to zero amplitude output, and +10V in corresponds to maximum amplitude

out. This mode is activated by selecting "Ext Control" on the front-panel amplitude menu, or with the "source:voltage external" command. The polarity remains at its last setting.

OUTPUT IMPEDANCE

The AVR-5B-B features an output impedance of the order of several Ohms (rather than 50 Ohms). The following consequences of this feature should be noted:

- When used to switch some semiconductor devices (eg. bipolar and VMOS power transistors), the AVR unit will yield much faster switching times than those provided by 50 Ohm pulse generators.

- The AVR unit will safely operate in to load impedances in the range of 50 Ohms to an open circuit. However, severe ringing may occur on the output waveform if a high-impedance load is used, due to transmission line impedance mismatching. When driving high impedance loads, it may be beneficial to add a 50 Ohm impedance in parallel with the high impedance load, in order to provide a proper termination for any transmission lines used.

- The AVR unit may be effectively converted to a 50 Ohm output impedance generator by placing a 50 Ohm carbon composition resistor in series with the output of the unit and the load. The maximum available load voltage into a 50 Ohm load will then decrease to 250 Volts, from 500 Volts.

PREVENTING OUTPUT STAGE FAILURE

The output stage is protected against overload conditions by an overload circuit and fuses on the main frame back panel. However, the output switching elements may fail if the unit is triggered at a PRF exceeding 10 kHz or at duty cycles resulting in an average output power in excess of 50 Watts. Heating and subsequent possible failure of the output stage is reduced if the following action is taken where possible:

- PRF is kept to a minimum, i.e. operate in a low PRF range when possible rather than in a high PRF range.

- Keep the output PW to a minimum.

- Never apply an externally generated voltage to the output port.

- Reduce the amplitude below 100 Volts before changing the output polarity. Note that internal protection circuits will prevent the polarity from switching when the amplitude is set higher than ±100V, until the internal power supplies have discharged the voltage on the internal energy-storage capacitors to below ±100V. This may take several seconds.

OPERATIONAL CHECK

This section describes a sequence to confirm the basic operation of the instrument. It should be performed after receiving the instrument. It is a useful learning exercise as well.

Before proceeding with this procedure, finish read this instruction manual thoroughly. Then read the “Local Control” section of the “Programming Manual for -B Instruments” thoroughly. The “Local Control” section describes the front panel controls used in this operational check - in particular, the MOVE, CHANGE, and ADJUST controls.

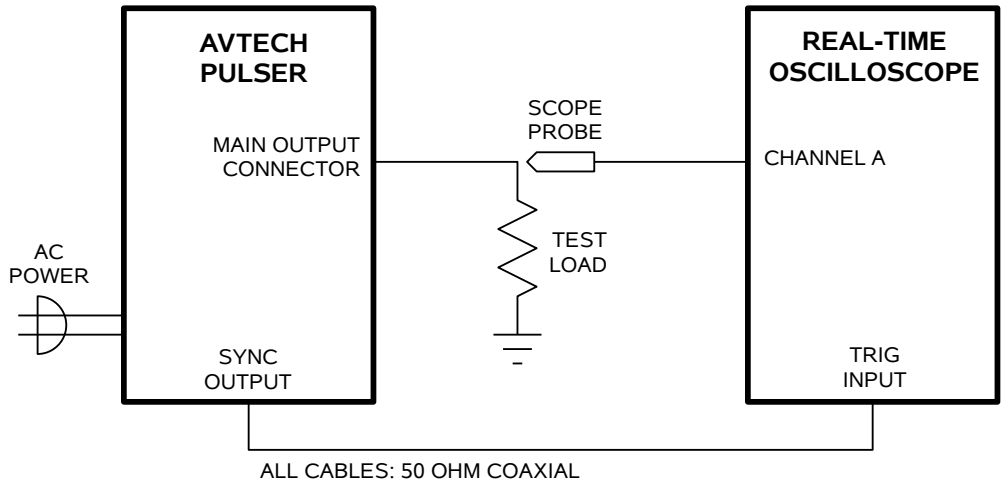

1. Connect a cable from the SYNC OUT connector to the TRIG input of an oscilloscope. Connect a non-inductive 50W (or higher) 50Ω load to the OUT connector and place the scope probe across this load. The load resistor <u>must</u> have a voltage rating of at least 500V. The power dissipated in the resistor is given by

   $$P = (V^2 / R) \times (PW / T) = (V^2 / R) \times PW \times f$$

   where “V” is the output voltage, “R” is the load resistance, “PW” is the pulse width, and “T” is the pulse period (1/frequency), and “f” is the frequency.

2. Set the oscilloscope to trigger externally with the vertical setting at 100 Volts/div and the horizontal setting at 1 us/div. Be sure that your oscilloscope and probe setup can handle the maximum amplitude of 500V. A high-voltage attenuator might be necessary to avoid damaging the probe and oscilloscope. The 50Ω load resistor should be rated for at least 500V of voltage and 50W of power.

3. Turn on the AVR-5B-B. The main menu will appear on the LCD.

4. To set the AVR-5B-B to trigger from the internal clock at a PRF of 1 kHz:

   - The arrow pointer should be pointing at the frequency menu item. If it is not, press the MOVE button until it is.

   - Press the CHANGE button. The frequency submenu will appear. Rotate the ADJUST knob until the frequency is set at 1 kHz.

   - The arrow pointer should be pointing at the “Internal” choice. If it is not, press MOVE until it is.

   - Press CHANGE to return to the main menu.

5. To set the delay to 1 us:

   - Press the MOVE button until the arrow pointer is pointing at the delay menu item.

   - Press the CHANGE button. The delay submenu will appear. Rotate the ADJUST knob until the delay is set at 1 us.

   - The arrow pointer should be pointing at the “Normal” choice. If it is not, press MOVE until it is.

   - Press CHANGE to return to the main menu.

6. To set the pulse width to 1 us:

   - Press the MOVE button until the arrow pointer is pointing at the pulse width menu item.

   - Press the CHANGE button. The pulse width submenu will appear. Rotate the ADJUST knob until the pulse width is set at 1 us.

   - The arrow pointer should be pointing at the “Normal” choice. If it is not, press MOVE until it is.

   - Press CHANGE to return to the main menu.

7. At this point, nothing should appear on the oscilloscope.

8. To enable the output:

   - Press the MOVE button until the arrow pointer is pointing at the output menu item.

- Press the CHANGE button. The output submenu will appear.
- Press MOVE until the arrow pointer is pointing at the “ON” choice.
- Press CHANGE to return to the main menu.

9. To change the output amplitude:
   - Press the MOVE button until the arrow pointer is pointing at the amplitude menu item.
   - Press the CHANGE button. The amplitude submenu will appear. Rotate the ADJUST knob until the amplitude is set at +200V (or -200V for "-N" instruments).
   - Observe the oscilloscope. You should see 1 us wide, 200V pulses.
   - Rotate the ADJUST knob. The amplitude as seen on the oscilloscope should vary.
   - Reduce the amplitude to 50V (or -50V for "-N" instruments), using the adjust knob.
   - *For "-PN" units only:* Change the output polarity by pressing the “+/-” button. The output amplitude should become negative, and you should see -50V pulses on the oscilloscope. (Avoid switching polarity when the amplitude is higher than 100V. Reduce the amplitude first.)
   - Rotate the ADJUST knob. The amplitude as seen on the oscilloscope should vary.
   - Press CHANGE to return to the main menu.
10. Repeat step 9, but set the amplitude to zero.
11. This completes the operational check.

PROGRAMMING YOUR PULSE GENERATOR

KEY PROGRAMMING COMMANDS

The “Programming Manual for -B Instruments” describes in detail how to connect the pulse generator to your computer, and the programming commands themselves. A large number of commands are available; however, normally you will only need a few of these. Here is a basic sample sequence of commands that might be sent to the instrument after power-up:

*rst	(resets the instrument)
trigger:source internal	(selects internal triggering)
frequency 1000 Hz	(sets the frequency to 1000 Hz)
pulse:width 1 us	(sets the pulse width to 1 us)
pulse:delay 2 us	(sets the delay to 2 us)
volt 200	(sets the amplitude to 200 V)
output on	(turns on the output)

For triggering a single event, this sequence would be more appropriate:

*rst	(resets the instrument)
trigger:source hold	(turns off all triggering)
pulse:width 1 us	(sets the pulse width to 1 us)
pulse:delay 2 us	(sets the delay to 2 us)
output on	(turns on the output)
volt 200	(sets the amplitude to 200 V)
trigger:source immediate	(generates a single non-repetitive trigger event)
trigger:source hold	(turns off all triggering)
output off	(turns off the output)

To set the instrument to trigger from an external TTL signal applied to the rear-panel TRIG connector, use:

*rst	(resets the instrument)
trigger:source external	(selects internal triggering)
pulse:width 1 us	(sets the pulse width to 1 us)
pulse:delay 2 us	(sets the delay to 2 us)
volt 200	(sets the amplitude to 200 V)
output on	(turns on the output)

These commands will satisfy 90% of your programming needs.

ALL PROGRAMMING COMMANDS

For more advanced programmers, a complete list of the available commands is given below. These commands are described in detail in the “Programming Manual for -B Instruments”. (Note: this manual also includes some commands that are not implemented in this instrument. They can be ignored.)

Keyword	Parameter	Notes
LOCAL		
OUTPut:		
:[STATe]	<boolean value>	
:PROTection		
:TRIPped?		[query only]
REMOTE		
[SOURce]:		
:FREQuency		
[:CW | FIXed]	<numeric value>	
[SOURce]:		
:PULSe		
:PERiod	<numeric value>	
:WIDTh	<numeric value> | EXTernal	
:DCYCle	<numeric value>	
:HOLD	WIDTh | DCYCle	
:DELay	<numeric value>	
:GATE		
:TYPE	ASYNC | SYNC	
:LEVel	HIgh | LOw	
[SOURce]:		
:VOLTage		
[:LEVel]		
[:IMMediate]		
[:AMPLitude]	<numeric value> | EXTernal	
:PROTection		
:TRIPped?		[query only]
STATUS:		
:OPERation		
:[EVENt]?		[query only, always returns "0"]
:CONDition?		[query only, always returns "0"]
:ENABle	<numeric value>	[implemented but not useful]
:QUEStionable		
:[EVENt]?		[query only, always returns "0"]
:CONDition?		[query only, always returns "0"]
:ENABle	<numeric value>	[implemented but not useful]
SYSTem:		
:COMMunicate		
:GPIB		
:ADDRess	<numeric value>	
:SERial		
:CONTrol		
:RTS	ON | IBFull | RFR	
:[RECeive]		
:BAUD	1200 | 2400 | 4800 | 9600	
:BITS	7 | 8	
:ECHO	<boolean value>	
:PARity		

:[TYPE]	EVEN | ODD | NONE	
:SBITS	1 | 2	
:ERRor		
:[NEXT]?		[query only]
:COUNT?		[query only]
:VERSion?		[query only]
TRIGger:		
:SOURce	INTernal | EXTernal | MANual | HOLD | IMMediate	
*CLS		[no query form]
*ESE	<numeric value>	
*ESR?		[query only]
*IDN?		[query only]
*OPC		
*SAV	0 | 1 | 2 | 3	[no query form]
*RCL	0 | 1 | 2 | 3	[no query form]
*RST		[no query form]
*SRE	<numeric value>	
*STB?		[query only]
*TST?		[query only]
*WAI		[no query form]

MECHANICAL INFORMATION

TOP COVER REMOVAL

If necessary, the interior of the instrument may be accessed by removing the four Phillips screws on the top panel. With the four screws removed, the top cover may be slid back (and off).

Always disconnect the power cord before opening the instrument.

There are no user-adjustable internal circuits. For repairs other than fuse replacement, please contact Avtech (info@avtechpulse.com) to arrange for the instrument to be returned to the factory for repair.

⚠ Caution: High voltages are present inside the instrument during normal operation. Do not operate the instrument with the cover removed.

RACK MOUNTING

A rack mounting kit is available. The -R5 rack mount kit may be installed after first removing the one Phillips screw on the side panel adjacent to the front handle.

ELECTROMAGNETIC INTERFERENCE

To prevent electromagnetic interference with other equipment, all used outputs should be connected to shielded 50Ω loads using shielded 50Ω coaxial cables. Unused outputs should be terminated with shielded 50Ω coaxial terminators or with shielded coaxial dust caps, to prevent unintentional electromagnetic radiation. All cords and cables should be less than 3m in length.

MAINTENANCE

REGULAR MAINTENANCE

This instrument does not require any regular maintenance.

On occasion, one or more of the four rear-panel fuses may require replacement. All fuses can be accessed from the rear panel. See the “FUSES” section for details.

CLEANING

If desired, the interior of the instrument may be cleaned using compressed air to dislodge any accumulated dust. (See the “TOP COVER REMOVAL” section for instructions on accessing the interior.) No other cleaning is recommended.

WIRING DIAGRAMS

WIRING OF AC POWER 1/2

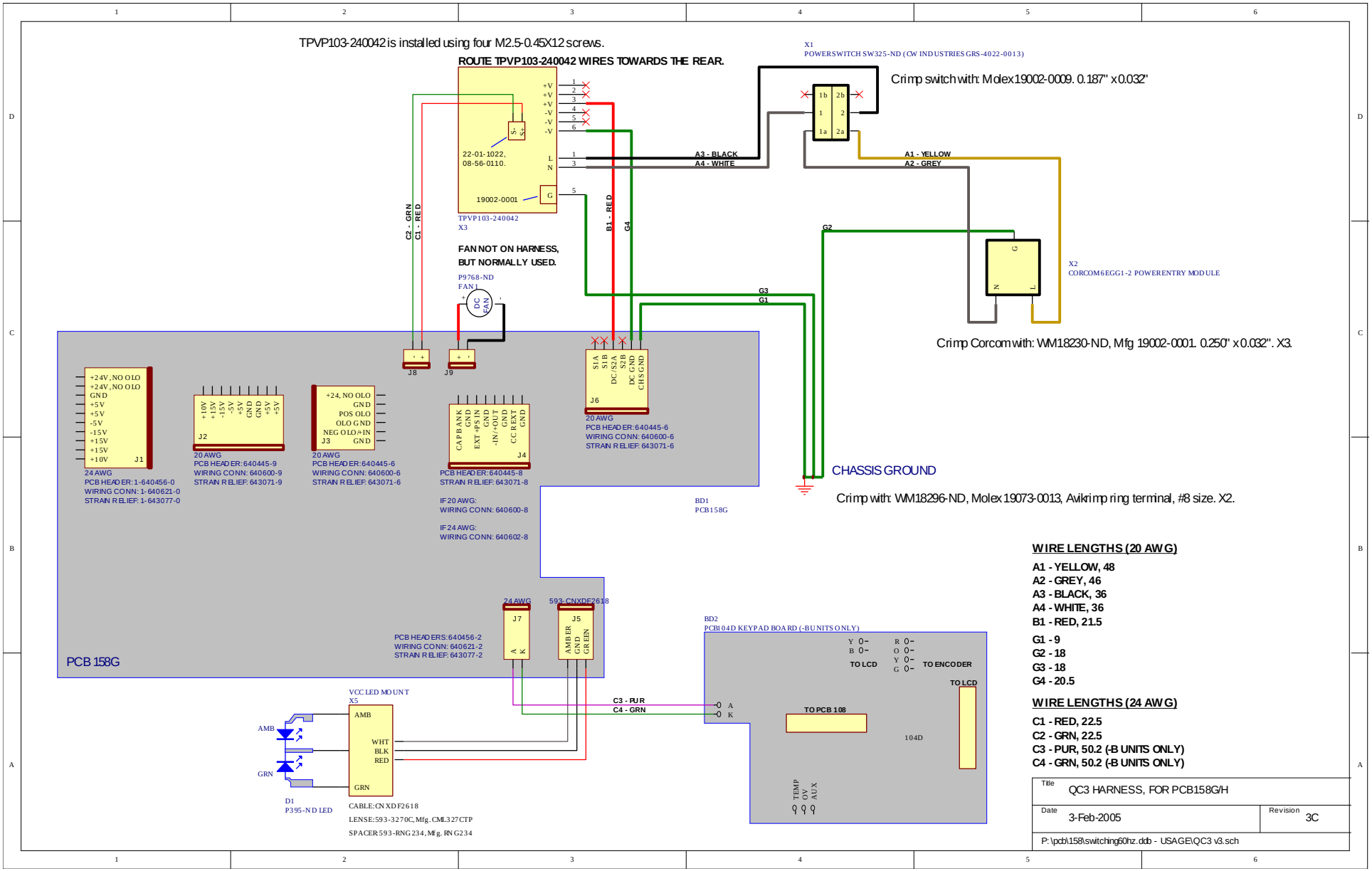

WIRING OF AC POWER 2/2

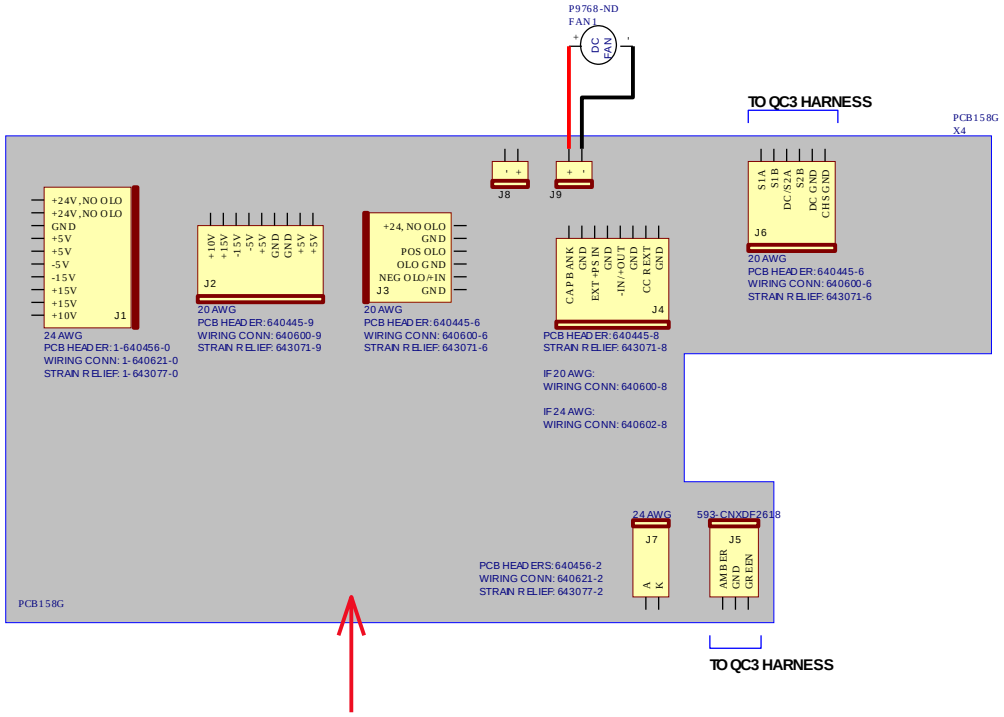

INSTALL C2 (1000uF, 35V, P5169-ND)
ON PCB BEFORE SCREWING IN PCB158

Title	AVR-5B-B POWER SUPPLY
Date 3-Feb-2005	Revision 1B
P:\circuits\avr-N\avr-N.ddb - AVR-5B-B-PN\univ ps v1.sch	

PCB 158G - LOW VOLTAGE POWER SUPPLY, 1/3

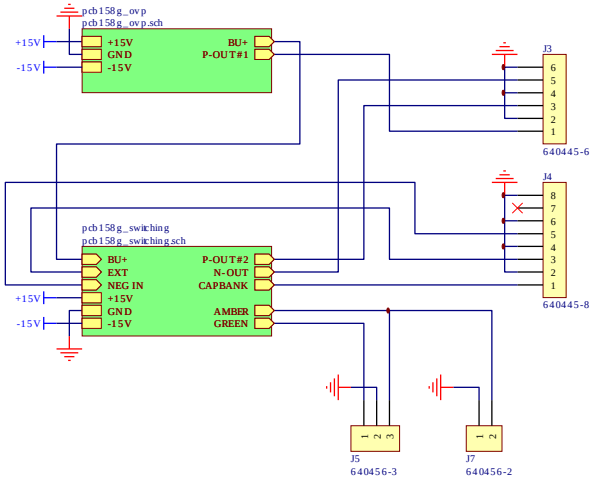

Title	LOW VOLTAGE DC/DC POWER SUPPLY
Date 3-Feb-2005	Revision
P:\pcb\158\switching60hz.ddb - 158G\pcb158g.sch	

PCB 158G - LOW VOLTAGE POWER SUPPLY, 2/3

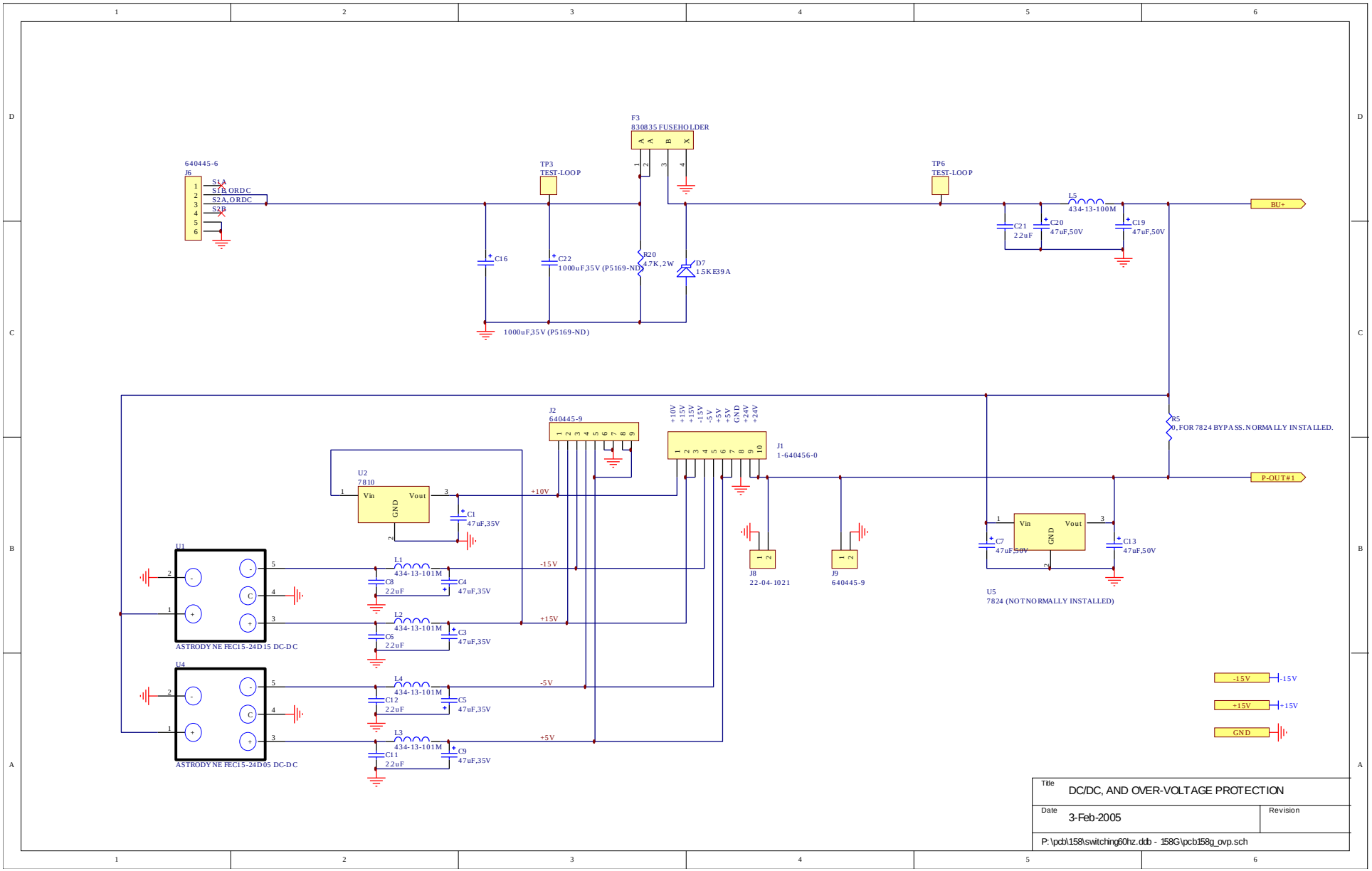

PCB 158G - LOW VOLTAGE POWER SUPPLY, 3/3

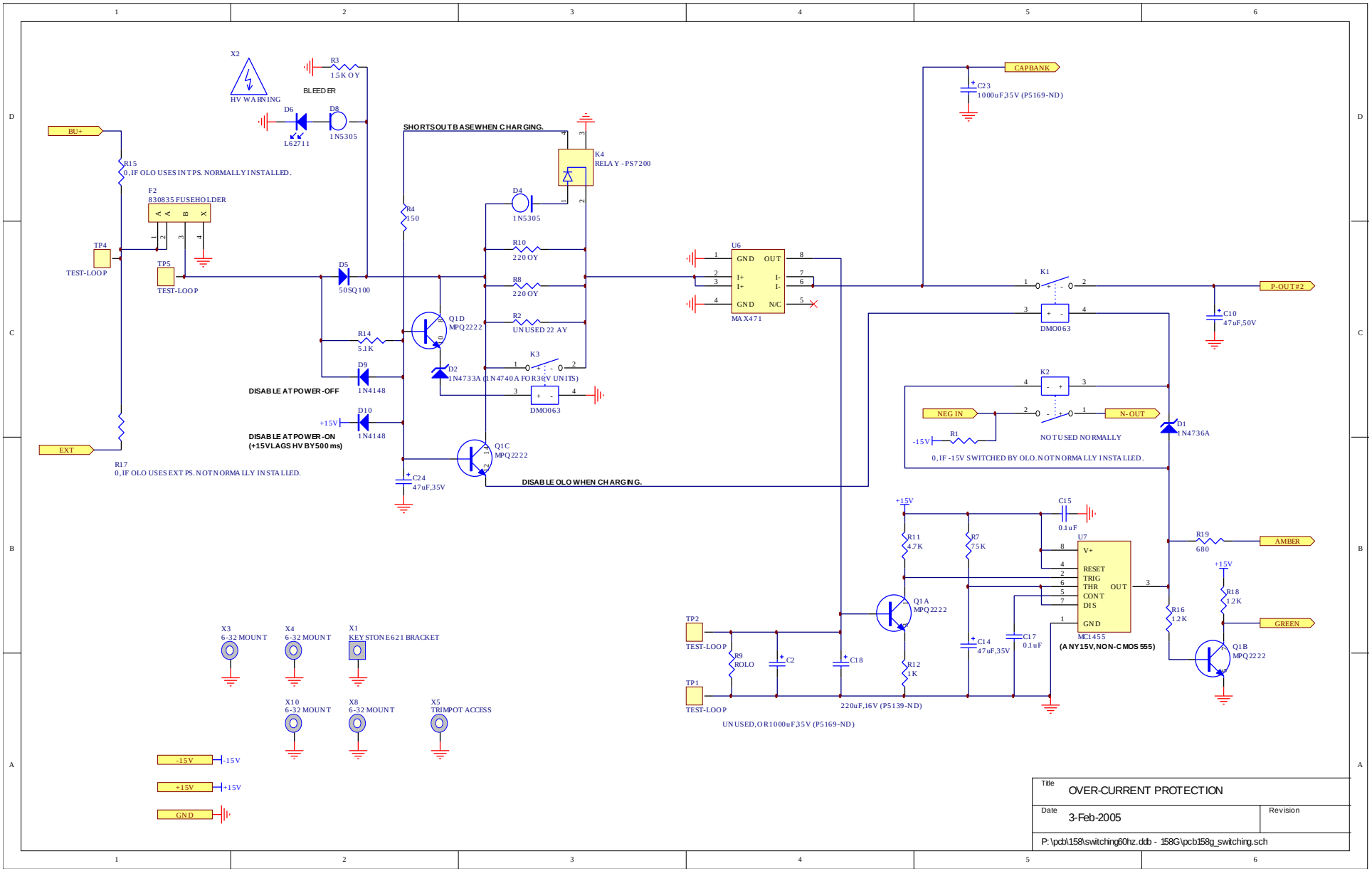

PCB 157 - HIGH-VOLTAGE DISCHARGE BOARD

The discharge circuitry is disabled by the '123 if the UV status pin indicates that the UV is current-limiting. This is ignored if the status pin is low because the POLR PCB has disabled the UV.

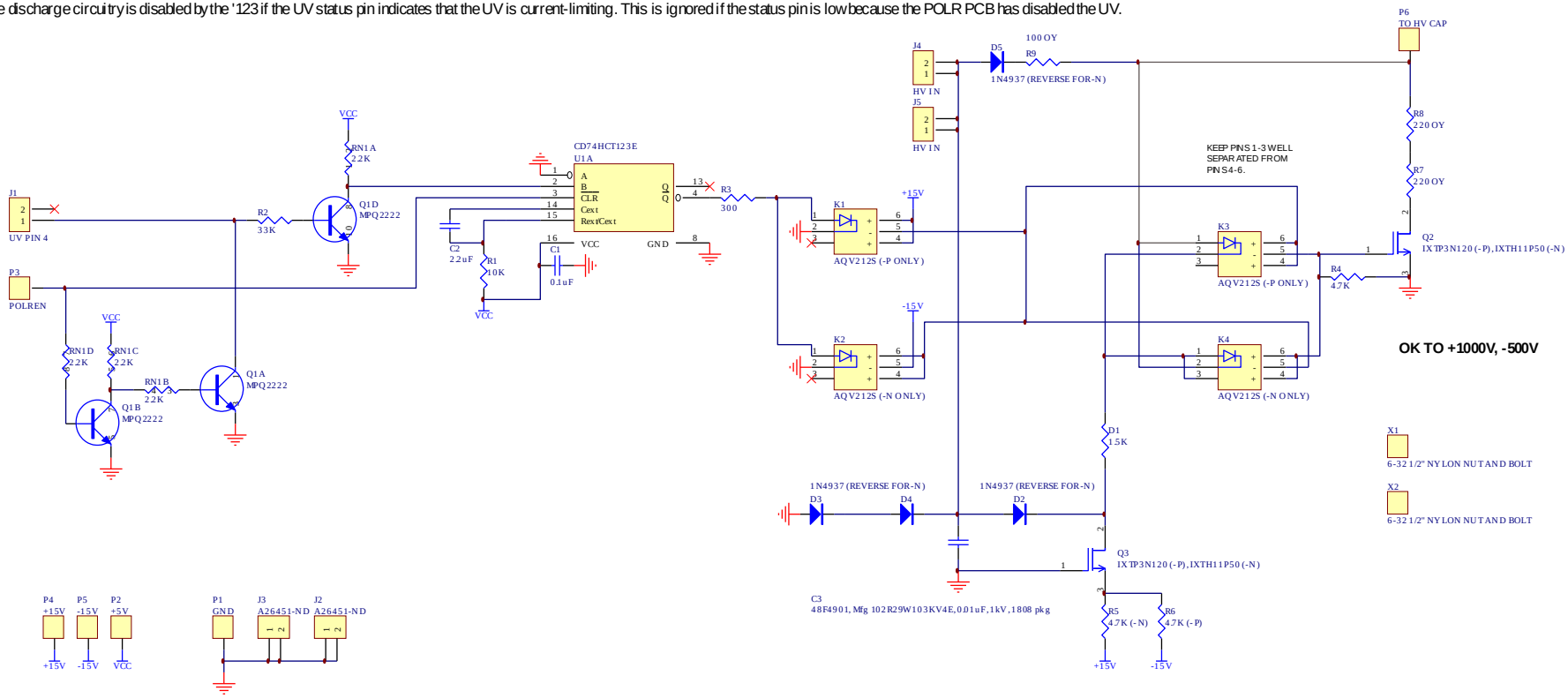

The main solid-state relay turns on if the voltage at the UV output is more than 5V lower than the voltage on the capacitor banks. This turns on a MOSFET that discharges the capacitors through the high-impulse-rated resistors.

The second MOSFET supplies a constant 2 mA bias to that is switched between the 1N4937 or the SSR+1N4937+100 OHM, depending on the voltage levels.

Title	POS/NEG CAP DISCHARGER CIRCUIT
Date 29-Sep-2004	Revision 1
P:\pcb\157\hv_discharge\hv_discharge.ddb - 157A\pcb157.sch	

PCB 156 - POLARITY CONTROL BOARD (-PN UNITS ONLY)

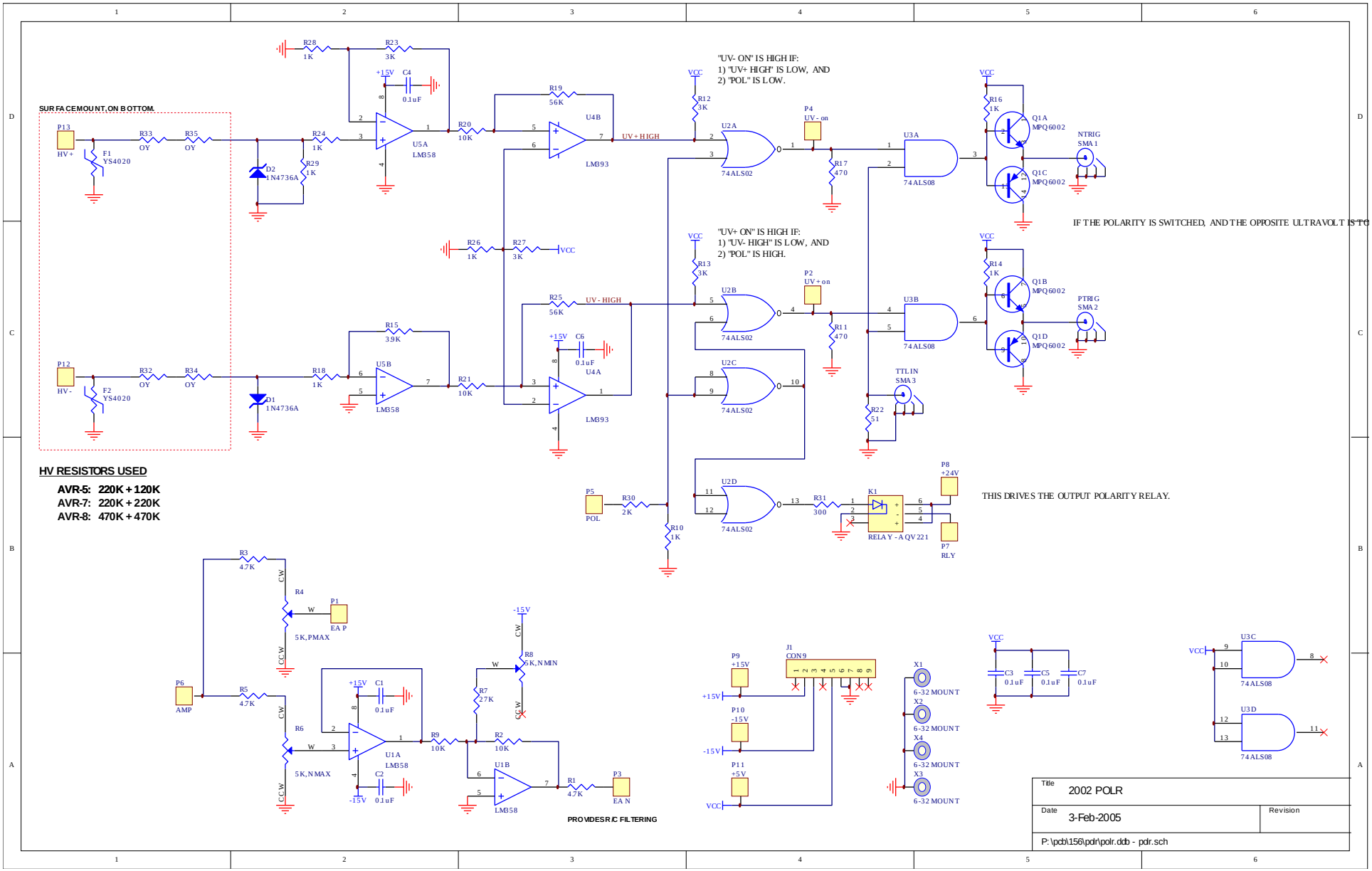

PCB 104D - KEYPAD / DISPLAY BOARD, 1/3

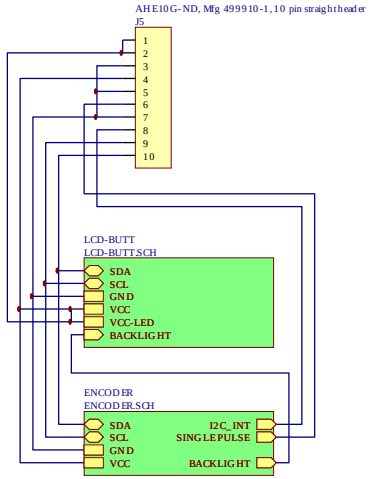

Title	PANEL TOP-LEVEL SCHEMATIC
Date 17-Dec-2004	Revision
P:\pcb\104d\keypad-2004.DDB - Documents\Panelbrd.prj	

PCB 104D - KEYPAD / DISPLAY BOARD, 2/3

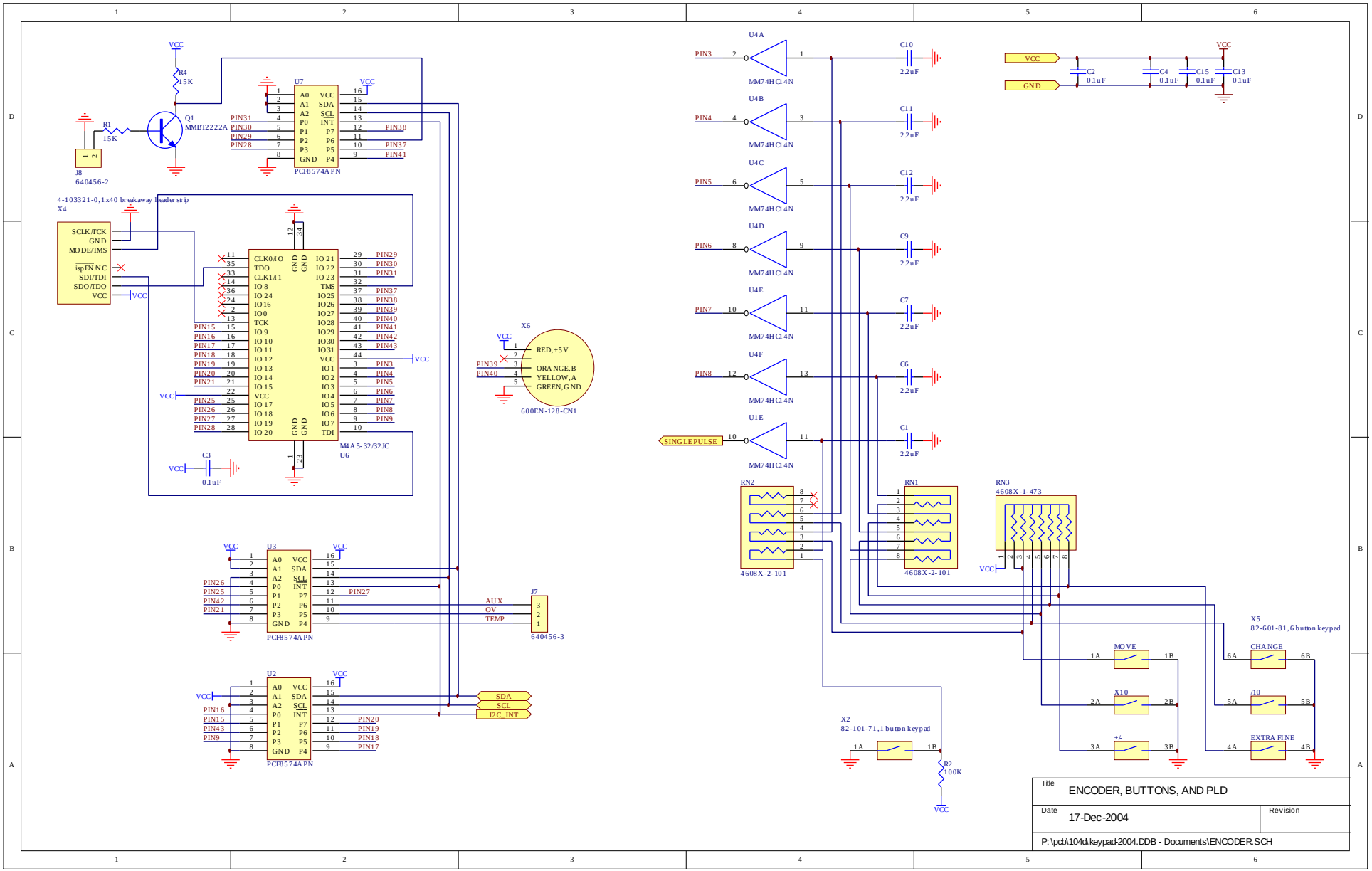

PCB 104D - KEYPAD / DISPLAY BOARD, 3/3

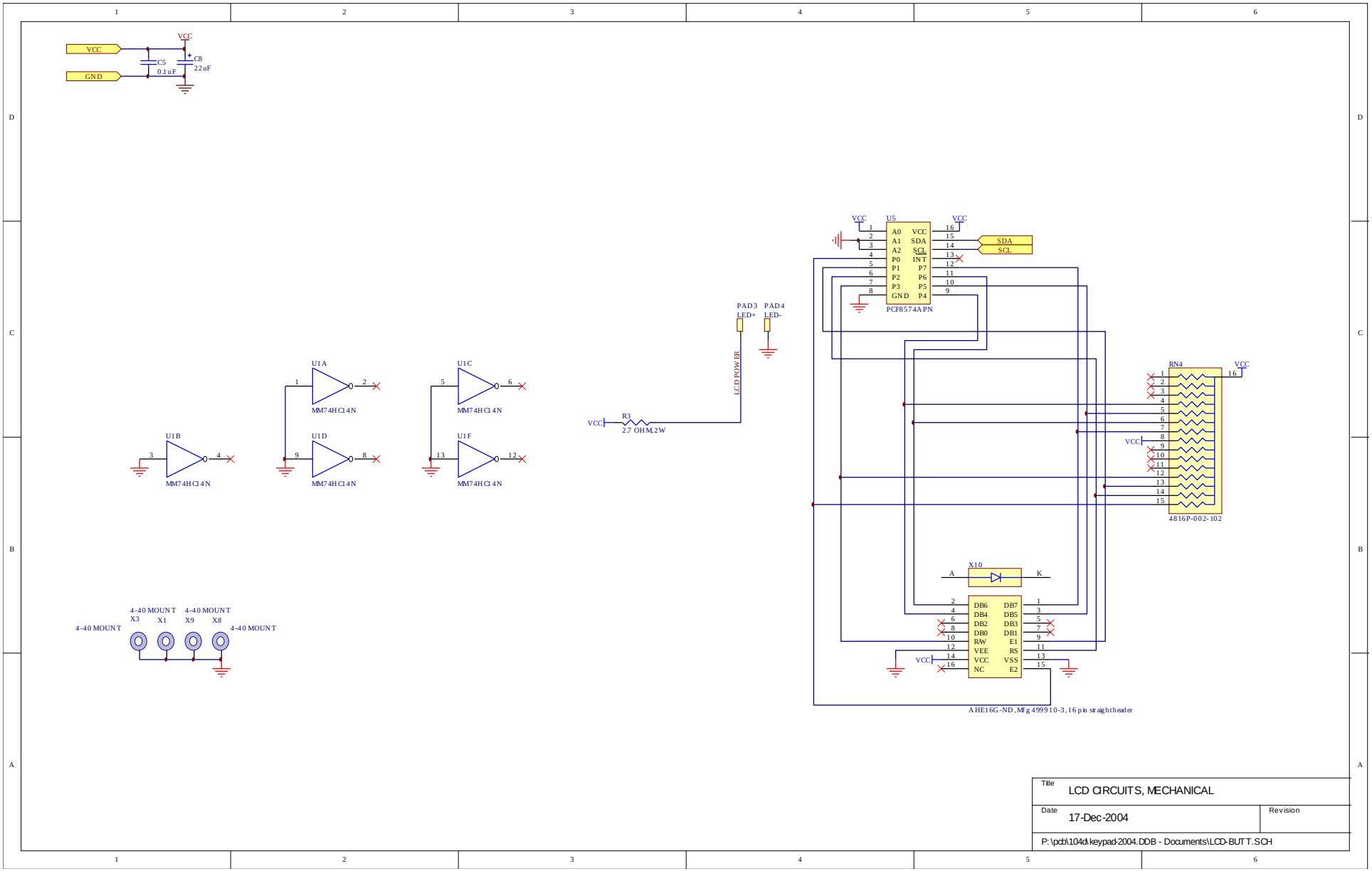

MAIN WIRING - DUAL POLARITY UNITS (-PN)

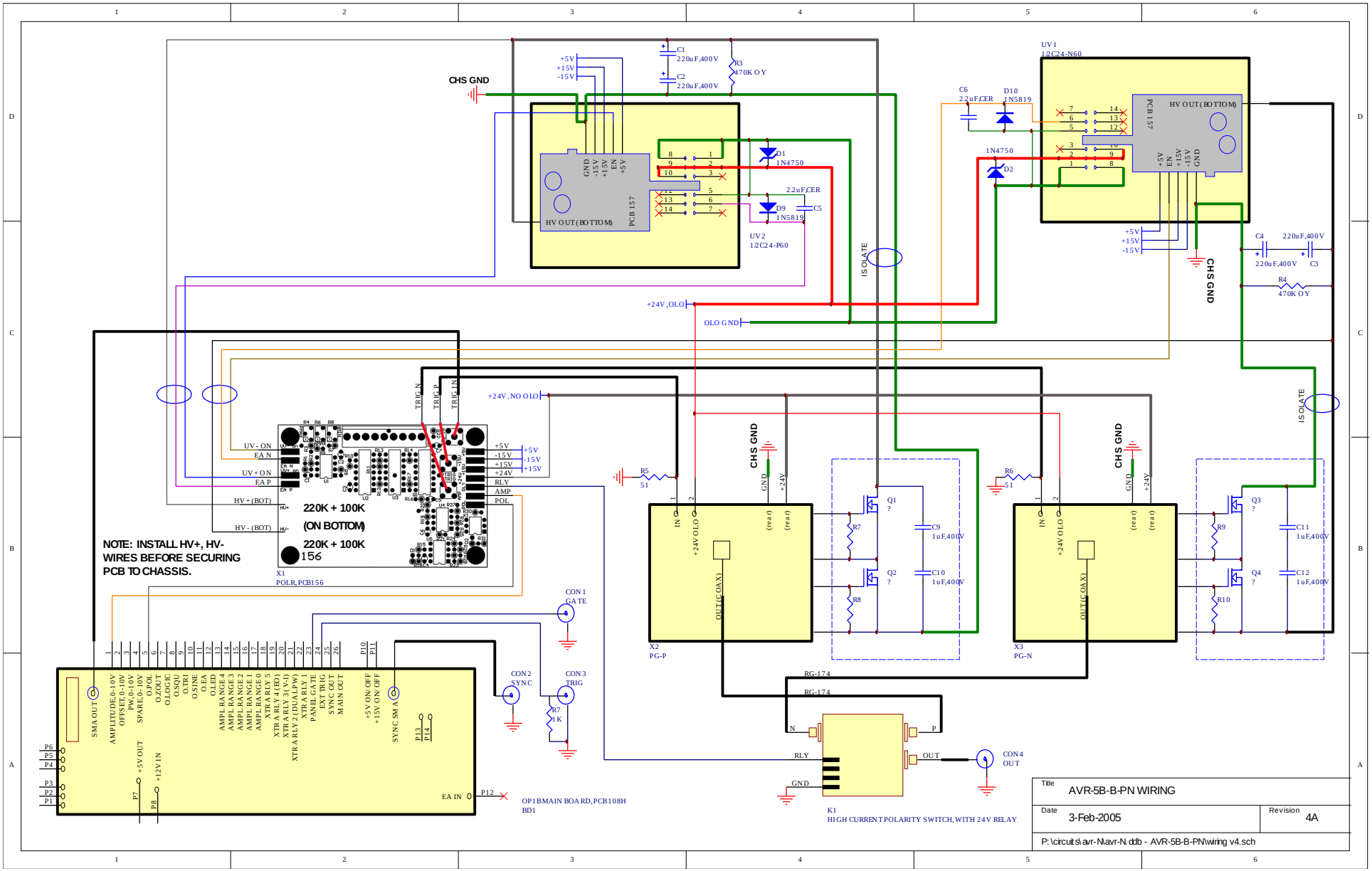

PERFORMANCE CHECK SHEET